ghost™

# PUMP KIT WIRING DIAGRAM

RECTORSEAL
A CSW Industrials Company

SAMSUNG
QUIETSIDE®

Wiring instructions for Ghost Pumps:

**•Elbow •External •External Plus •Internal •Remote**

## ALL 115V AND 230V MODELS MINI-SPLIT AND VRF

1. Check evaporator voltage to ensure that pump voltage is correct.
2. Install 1 amp inline fuse between evaporator and pump to protect pump and unit.
3. Connect pump power cable to terminal block in evaporator as shown on diagram. This will ensure that pump is powered only when evaporator has power.

**NOTE: DO NOT USE SEPARATE 115 or 230 VOLT OUTLET TO POWER PUMP AS THIS IS NOT FAIL SAFE AND MAY CAUSE AN OVERFLOW!**

4. Connect alarm cable to indoor coil temperature sensor as shown in diagram using blue and yellow wires only.

**NOTE: OVERFLOW ALARM WIRE MUST BE CONNECTED TO ENSURE THAT IN CASE OF PUMP FAILURE OR BLOCKAGE IN DISCHARGE HOSE, EVAPORATOR WILL SHUT DOWN. CONNECTION OF THE OVERFLOW ALARM CIRCUIT IS MANDATORY AND FAILURE TO DO SO WILL INVALIDATE PUMP WARRANTY!**

**Elbow**
**External**
**External Pus**

**Internal**
**Remote**

**115V AC**
**230V AC**

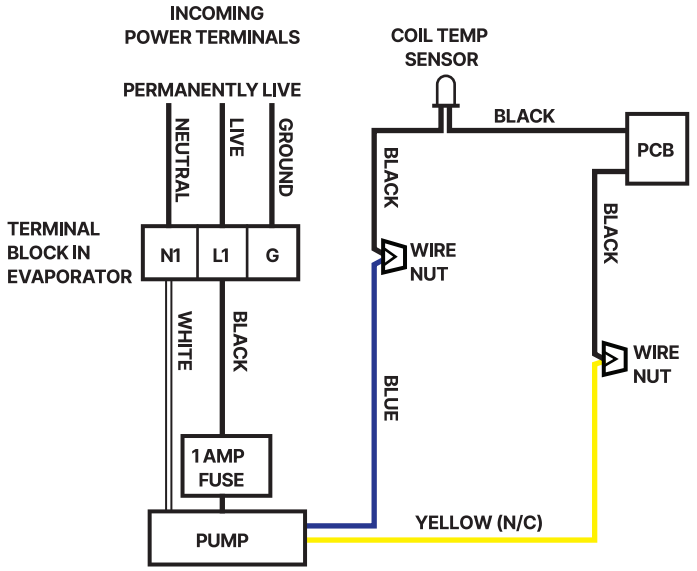


**NOTE: NO GROUND WIRE IS REQUIRED FOR PUMPS AS THEY ARE CLASS II APPLIANCES.**