ghost™

PUMP KIT WIRING DIAGRAM

RECTORSEAL
A CSW Industrials Company

FRIEDRICH
1883

Wiring instructions for Ghost Pumps:

•Elbow •External •External Plus •Internal •Remote

FRIEDRICH 230 VOLT MODELS

ALL MULTIZONE MODELS

1. Check evaporator voltage to ensure that pump voltage is correct.
2. Install 1 amp inline fuse between evaporator and pump to protect pump and unit.
3. Connect pump power cable to terminal block in evaporator as shown on diagram. This will ensure that pump is powered only when evaporator has power.

NOTE: DO NOT USE SEPARATE 230 VOLT OUTLET TO POWER PUMP AS THIS IS NOT FAIL SAFE AND MAY CAUSE AN OVERFLOW!

4. Break wire 3 and re-connect as shown in diagram using blue and yellow wires only.

NOTE: OVERFLOW ALARM WIRE MUST BE CONNECTED TO ENSURE THAT IN CASE OF PUMP FAILURE OR BLOCKAGE IN DISCHARGE HOSE, EVAPORATOR WILL SHUT DOWN. CONNECTION OF THE OVERFLOW ALARM CIRCUIT IS MANDATORY AND FAILURE TO DO SO WILL INVALIDATE PUMP WARRANTY!

Elbow
External
External Pus

Internal
Remote

230V AC

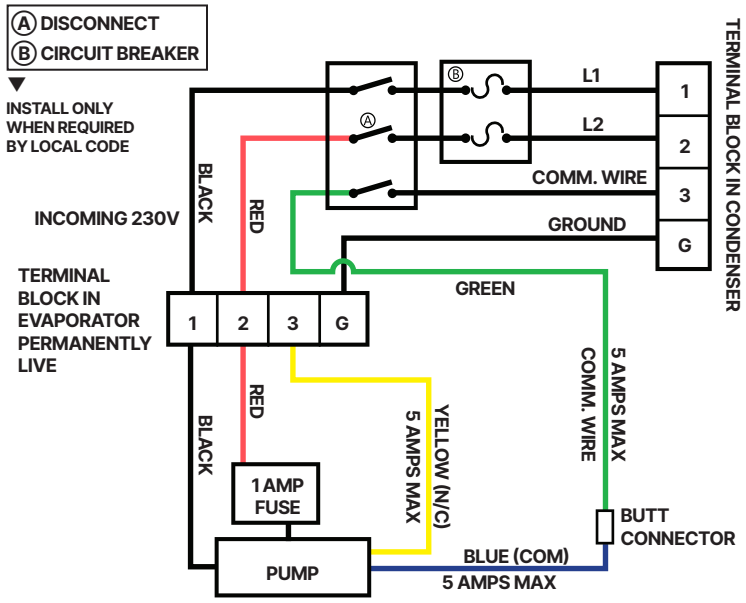

NOTE: NO GROUND WIRE IS REQUIRED FOR PUMPS AS THEY ARE CLASS II APPLIANCES.