DUST FREE®
BREATHE THE DIFFERENCE®

SYSTEM SERVICE TRANSITION

PERFORMANCE

SST2

The industry's only compact, knock-down, system transition with a true access door, large enough to allow for proper inspections and maintenance.



Optimized SEER Performance Plus Easy Service Solution

The SST2™ System Service Transition solution allows for quick and efficient HVAC system service, while providing optimal SEER performance with 100% airflow. The removable, insulated, access door, gives the servicing contractor the space they need to properly inspect, clean, diagnose and maintain the evaporator coil and the furnace heat exchanger.

Optimized SEER Performance

The SST2 improves air flow distribution without block-offs or restrictions. Compatible with 2023 SEER2 standards.

No More Small "Inspection" Doors.

Extra-large door allows true access for inspections, cleaning, leak detection, and system checks.

Fits Multiple Applications.

Available in Side Access Series and Closet Series for upflow, horizontal, attic, closet, and basement applications.

Fully Insulated.

Fully lined with foil-backed, UV-safe, R4.3 insulation that meets application standards and code compliance for HVAC accessories.

Easy To Carry.

“Knock-down” format makes the SST2 easy to carry into tight spaces and field assemble in minutes.

Save Time And Labor.

Save time dismantling or cutting into a system for service. Save time re-assembling and resealing the system afterward.

IAQ Ready.

Pre-fabricated for a variety of Dust Free® indoor air quality product installations.

DUST FREE®
BREATHE THE DIFFERENCE.

SST2

SPECIFICATIONS

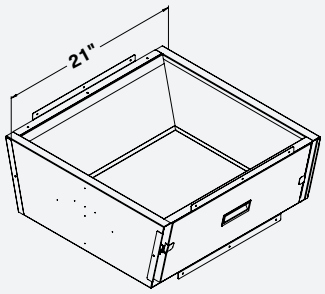

Side Access Series

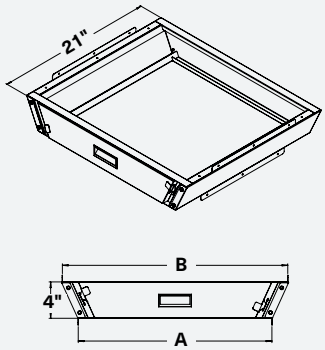

Closet Series

Sizes Side Access Series All sizes ship in knock-down format, 4" x 26" x 10"	Code	Dim A / B	Cabinet
	DF19830	14" / 14.25"	A Furnace to A Coil
	DF19831	14.25" / 17.75"	A Furnace to B Coil
	DF19832	14.25" / 21.25"	A Furnace to C Coil
	DF19833	17.5" / 17.75"	B Furnace to B Coil
	DF19834	17.75" / 21.25"	B Furnace to C Coil
	DF19835	17.75" / 24.75"	B Furnace to D Coil
	DF19836	21" / 21.25"	C Furnace to C Coil
	DF19837	21.25" / 24.75"	C Furnace to D Coil
	DF19838	24.5" / 24.75"	D Furnace to D Coil

Sizes Closet Series	Code	Dim A / B	Cabinet
	DF19840	14" / 14.25"	A Furnace to A Coil
	DF19841	14.25" / 17.75"	A Furnace to B Coil
	DF19842	14.25" / 21.25"	A Furnace to C Coil
	DF19843	17.5" / 17.75"	B Furnace to B Coil
	DF19844	17.75" / 21.25"	B Furnace to C Coil
	DF19845	17.75" / 24.75"	B Furnace to D Coil
	DF19846	21" / 21.25"	C Furnace to C Coil
	DF19847	21.25" / 24.75"	C Furnace to D Coil

IMAGES


SST2 Side Access Series. Extra-large access door for easy inspections of critical system components.

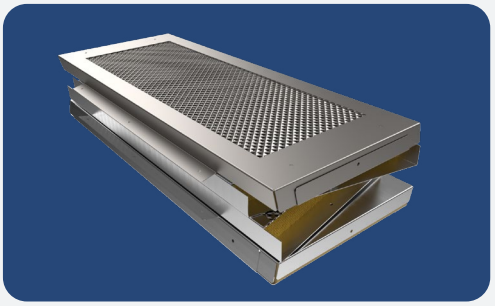
Compact "knock-down" format is easy to carry and assemble on site.


SST2 Closet Series installed between a furnace and coil.

The SST2 has a maximum airflow temperature of 300 °F with its insulation having been tested to ASTM C411, ASTM C447, and ASTM E84. Based on research, residential oil burning furnaces operate between 140 °F and 210 °F. The SST2 can be installed with residential oil burning furnaces assuming they operate in this range.

Limited Warranty

5YR LIMITED WARRANTY

For more information on our product limited warranty, visit RectorSeal.com

Manufactured by

RectorSeal, LLC

2601 Spenwick Drive • Houston, TX 77055, USA • 800-231-3345 • Fax 800-441-0051 • rs.today/dust-free

A CSW Industrials Company. RectorSeal, the logos and other trademarks are property of RectorSeal, LLC, its affiliates or its licensors and are protected by copyright, trademark and other intellectual property laws, and may not be used without permission. RectorSeal reserves the right to change specifications without prior notice. ©2024 RectorSeal. All rights reserved. R51176-1025