RECTORSEAL®

A CSW Industrials Company

INSTALLATION MANUAL

DUST FREE® SST2

System Service Transition

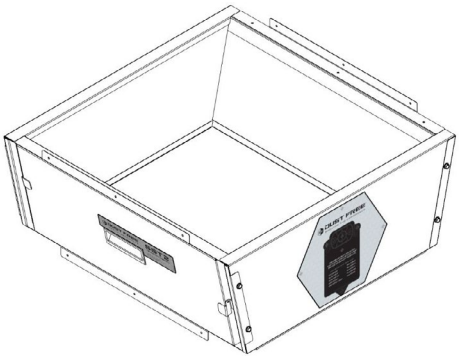

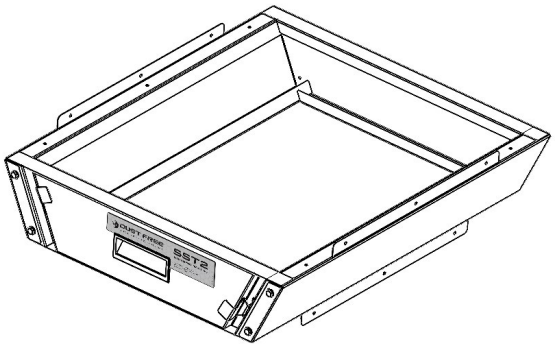

U.S. Patent Nos. 9267702; 10151507
Canadian Patent Nos. 2,865,781; 2,835,898
Additional Patents Pending

General

This product serves as a transition between the furnace and evaporator coil, which helps to maintain a smooth flow transition, facilitates quick access and proper maintenance of the coil over time.

Before Installing

- Read all instructions carefully. Failure to do so could damage the equipment or cause harm to yourself or others.
- Acknowledge all warnings.
- Only qualified technicians should perform the installation.

Additional specifications

- Lined with foil-faced R4 insulation
- 24-gauge galvanized steel construction
- Ships in collapsed configuration for easy transport

Required tools

- Electric drill
- 5⁄16" hex head tool bit
- Tin snips / scissors / knife
- Foil tape

This manual covers the following models:

Model number	Description
DF19830	SST2 AA
DF19831	SST2 AB
DF19832	SST2 AC
DF19833	SST2 BB
DF19834	SST2 BC
DF19835	SST2 BD
DF19836	SST2 CC
DF19837	SST2 CD
DF19838	SST2 DD
DF19840	SST2 AA Closet
DF19841	SST2 AB Closet
DF19842	SST2 AC Closet
DF19843	SST2 BB Closet
DF19844	SST2 BC Closet
DF19845	SST2 BD Closet
DF19846	SST2 CC Closet
DF19847	SST2 CD Closet

Part Number: 218624-00
Previous Revision: 3A 04/23

Included inside box

- (1) – Rear Panel
- (1) – Door Frame
- (2) – Side Panels
- (1) – Door
- (9) – No. 10 x 3/8” Assembly Screws
- (13) – No. 10 x 5/8” Mounting Screws
- (1) – Installation Instructions

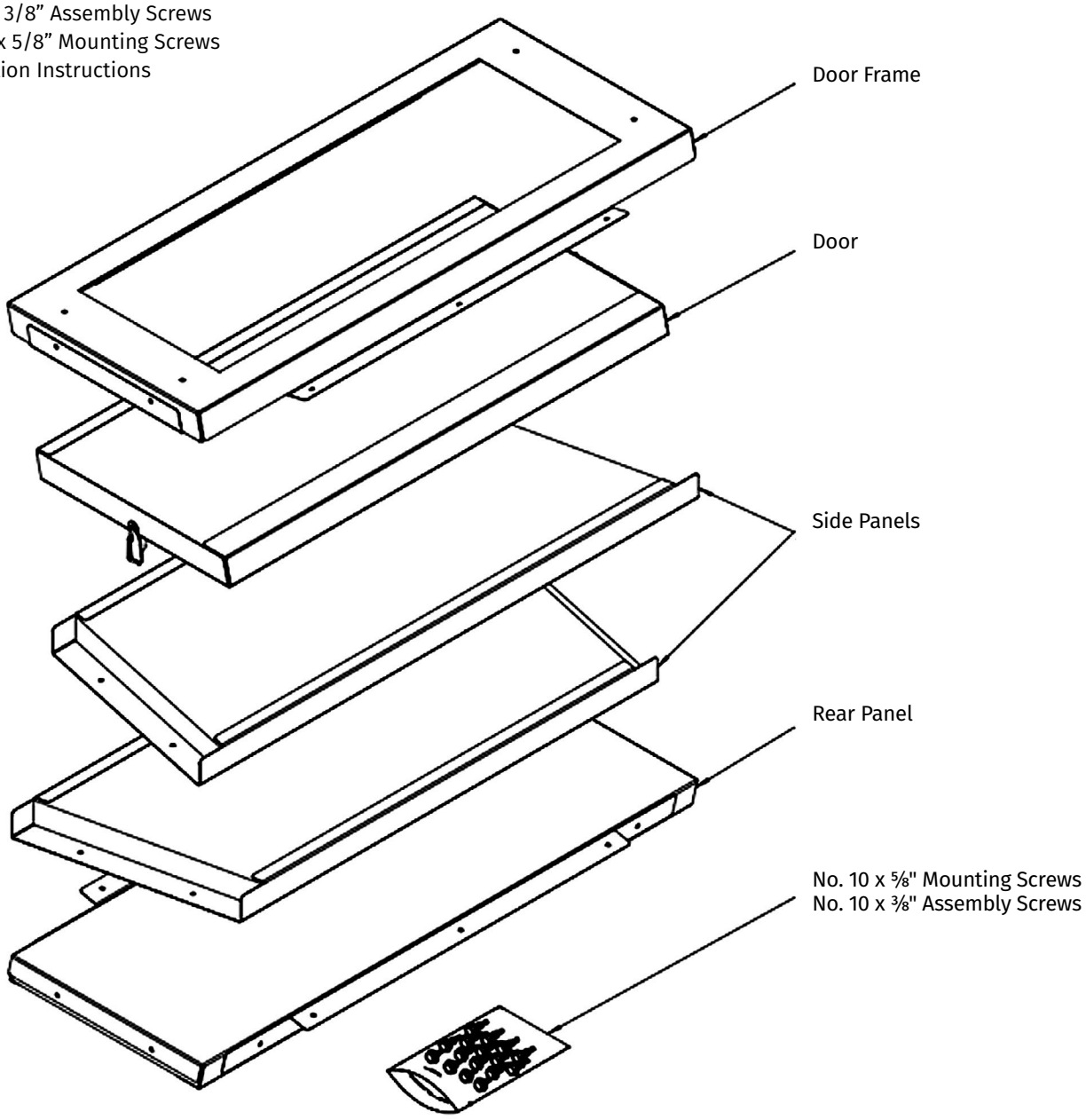

Figure 1: Components included inside the box

Specifications

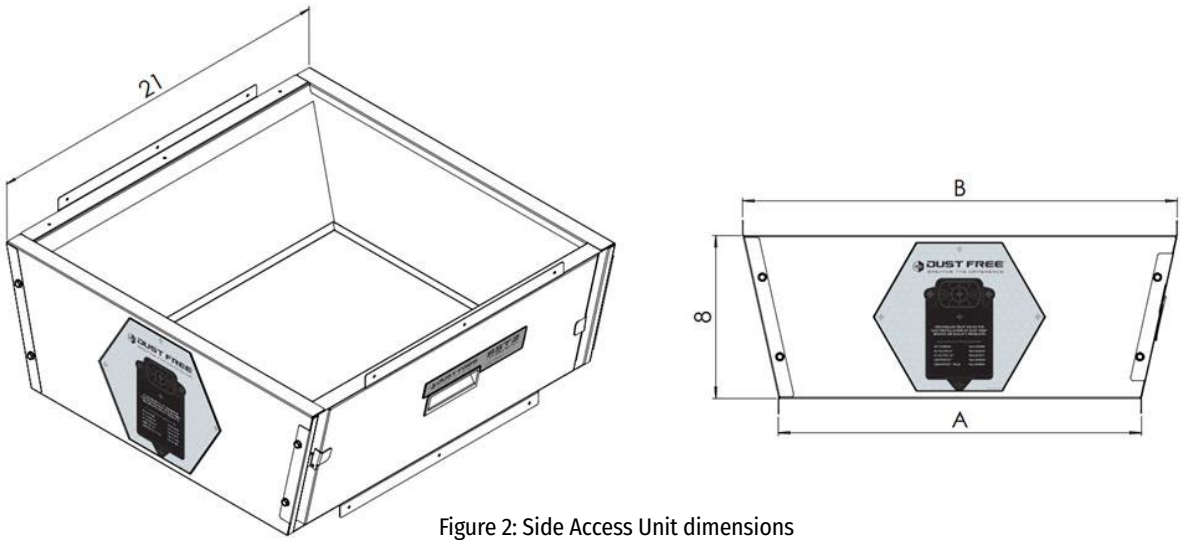

Figure 2: Side Access Unit dimensions

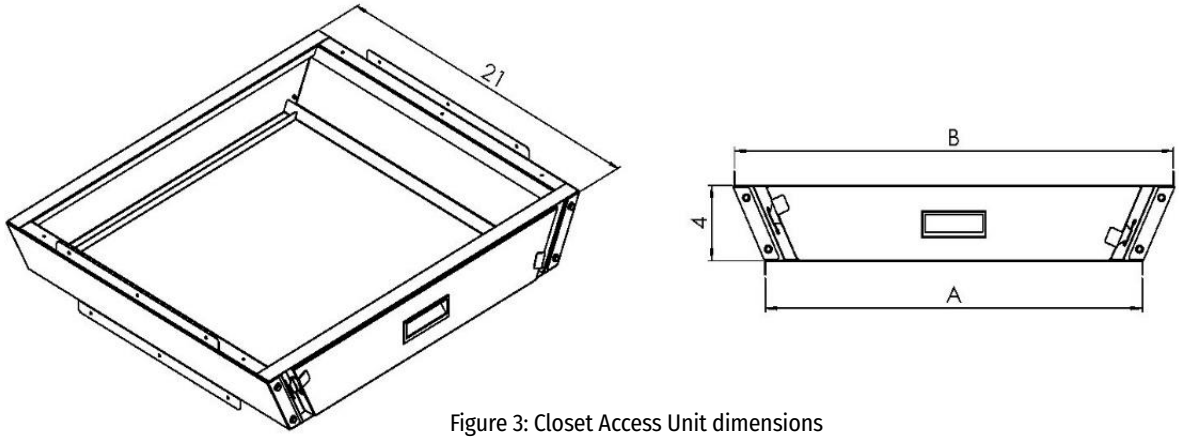

Figure 3: Closet Access Unit dimensions

Model	Dimension "A" (in.)	Dimension "B" (in.)	Packaged Weight (lbs.)
SST2 AA	14	14 ¼	9
SST2 AB	14 ¼	17 ¾	9.5
SST2 AC	14 ¼	21 ¼	9.5
SST2 BB	17 ½	17 ¾	9.5
SST2 BC	17 ¾	21 ¼	10
SST2 BD	17 ¾	24 ¾	10
SST2 CC	21	21 ¼	10
SST2 CD	21 ¼	24 ¾	10.5
SST2 DD	24 ¾	24 ¾	10.5
SST2 AA Closet	14	14 ¼	9
SST2 AB Closet	14 ¼	17 ¾	9.5
SST2 AC Closet	14 ¼	21 ¼	9.5
SST2 BB Closet	17 ½	17 ¾	9.5
SST2 BC Closet	17 ¾	21 ¼	10
SST2 BD Closet	17 ¾	24 ¾	10
SST2 CC Closet	21	21 ¼	10
SST2 CD Closet	21 ¼	24 ¾	10.5

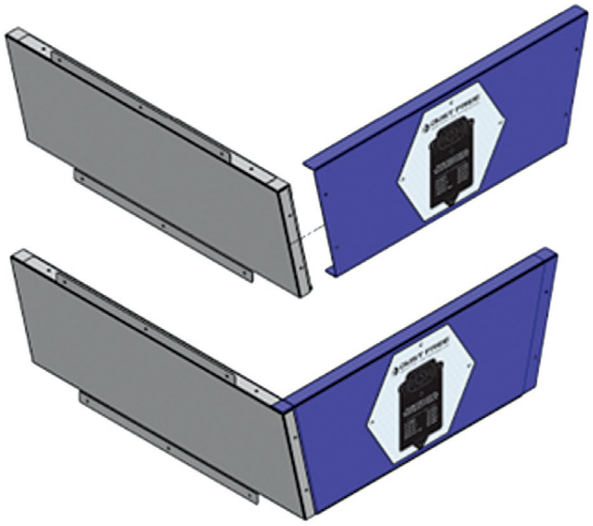

Figure 3: Side and rear panel alignment and assembly

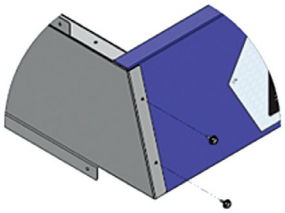

Figure 4: Secure rear panel to side panel with supplied No. 10 x 3/8" screws

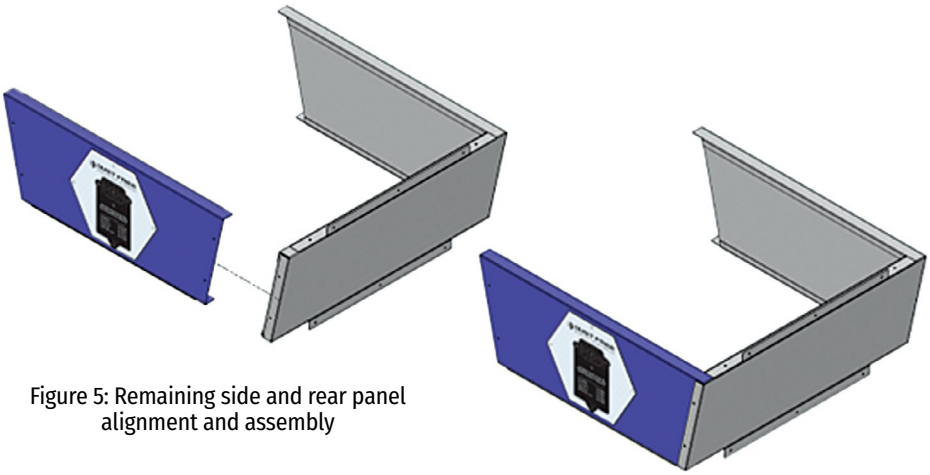

Figure 5: Remaining side and rear panel alignment and assembly

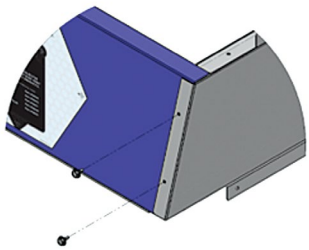

Figure 6: Secure rear panel to side panel with supplied No. 10 x 3/8" screws

Introduction

The Dust Free SST2 System Service Transition unit is designed to provide a smooth transition between the furnace and evaporator coil within the HVAC system, reducing airflow restrictions and increasing overall system efficiencies. The unit can be installed in closet, upflow, and horizontal applications and with box or slab coils. The removable latching door allows for easy access to the coil and heat exchanger to make regular inspection, maintenance, and cleaning quicker and easier.

Assembly

The Dust Free SST2 System Service Transition sections are designed to slide together for easy assembly. Carefully follow these instructions to ensure satisfactory fit and performance of the unit.

1. Remove the banded components from the box. Using tin snips or scissors, cut and dispose of the bands.
2. Place the rear panel on a firm surface. Align and insert one side panel into the rear panel, inside the flange as depicted in **Figure 3.**
3. Secure the rear panel to the side panel using the supplied No. 10 x ⅜" screws in the aligned pre-drilled holes as shown in **Figure 4.**
4. Align and insert the remaining side panel into the rear panel, inside the flange as depicted in **Figure 5.**
5. Secure the rear panel to the side panel using the supplied No. 10 x 3/8” screws in the aligned pre-drilled holes as shown in **Figure 6.**

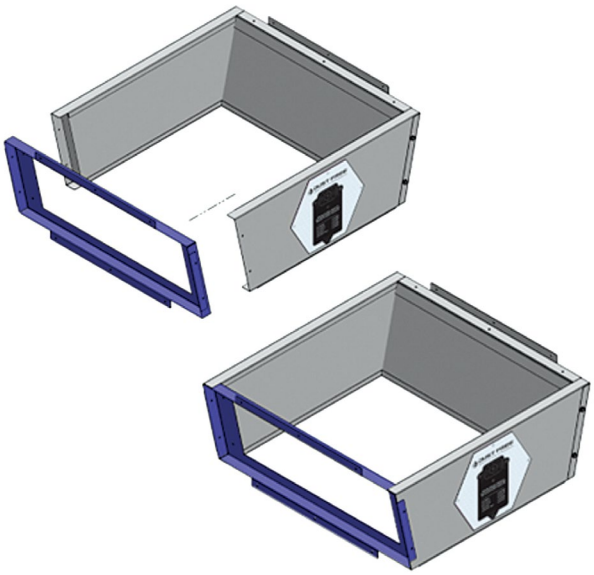

Figure 7: Door frame and unit alignment and assembly

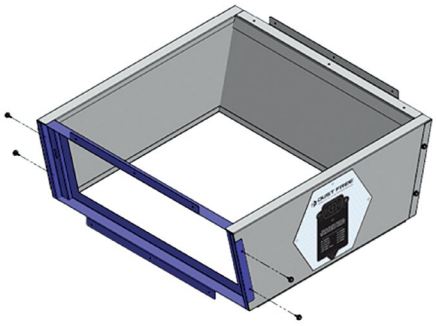

Figure 8: Secure door frame to rest of unit with supplied No.10 x 3/8" screws

6. Remove the door from the door frame. Align and insert the door frame into the side panels, with flanges outside the side panel as shown in **Figure 7.**
7. Secure the door frame to the side panels using the supplied No. 10 x ⅜" screws in the aligned pre-drilled holes as depicted in **Figure 8.**

Installation

Installation should only be performed by a certified professional. If you plan to install this unit yourself, please be aware that the improper use of any tool can be dangerous. The manufacturer does not assume any responsibility for failures due to incorrect installation procedures.

Before beginning any installation or modification, ensure that the main line electrical disconnect switch is in the OFF position. Unexpected start-up of the system blower could cause serious injury. Tag disconnect switch with suitable warning labels.

When working on the transition, observe precautions in the owner's manual, labels attached to the furnace or air handler, and other safety precautions that may apply. Follow all safety codes. Wear safety glasses and work gloves.

1. Position the System Service Transition unit atop the furnace heat exchanger.
2. Align the opening in the furnace with the opening in the System Service Transition.
3. Secure the System Service Transition unit to the furnace with the supplied No. 10 x 5/8" screws using the pre-drilled mounting holes on the bottom of the unit.
4. Position the coil atop the System Service Transition.
5. Align the opening in the System Service Transition with the opening in the coil.
6. Secure the coil to the System Service Transition with the supplied No. 10 x 5/8" screws using the pre-drilled mounting holes on the top of the unit.
7. Use foil tape or mastic to seal all joints between the furnace, System Service Transition, and coil.
8. Place the door back on the door frame and latch the unit closed.

Supplementary product installation

The Dust Free SST2 System Service Transition unit may be fitted with supplementary germicidal UV light or air purifier systems to further improve the indoor air quality of the HVAC system. This unit was designed with easy implementation of Dust Free-branded products in mind. The Side Access models are supplied with Pre-drilled pilot holes on the side panels, indicated by the crosshairs on the labels. Identify the product you are installing and drill out the holes as designated. Refer to the installation instructions provided with the supplementary system you are installing for further information.

Installer's Notes

Model Number: .....

Serial Number: .....

Date of Installation: .....

Installed By: .....

Owner's Name & Address: .....

.....

.....

Limited Warranty



For more information on our product limited warranty, visit RectorSeal.com

Manufactured by

RectorSeal, LLC

2601 Spenwick Drive, Houston, TX 77055, USA • 800-231-3345 • Fax 800-441-0051 • rectorseal.com
PO Box 5266 Brendale, Qld 4500, Australia • 1300 77 2878 • rectorseal.com.au
3255 Wyandotte St East Windsor, ON N8Y 1E9 • Canada • 519-966-4901

A CSW Industrials Company. RectorSeal, the logos and other trademarks are property of RectorSeal, LLC, its affiliates or its licensors and are protected by copyright, trademark and other intellectual property laws, and may not be used without permission. RectorSeal reserves the right to change specifications without prior notice. ©2024 RectorSeal. All rights reserved. R51180-1024