

POWER CONTROL SOLUTIONS

Reliable Surge Protection, Load Management and Transfer Switch Devices for Electrical Contractors and Technicians

PSP PRODUCTS

Contents

04 Surge Protective Devices

06 Residential Surge Protection

10 Commercial Surge Protection

16 Specialty Surge Protection

18 Load Management Systems

19 Electric Vehicle Charger Load Management

25 Wireless Generator Load Management

27 Residential Generator Load Management

31 Transfer Switch Devices

We’re Committed to Your Business Growth

Purchasing from PSP Products brings real-world advantages that make a meaningful impact for contractors, distributors, and end users alike. Our products are designed for fast, easy installation and deliver high profit margins, helping you save time and boost your bottom line. With a proven track record of reliable performance, Our products lead to happy customers, repeat business, and valuable referrals.

As a proud USA-based company, we provide live technical and sales support whenever you need it. You’ll benefit from fast shipping, exceptional value, and a best-in-class warranty for added confidence. We also offer custom solutions and advanced innovations like EV charger and generator load shedding—giving you a competitive edge with solutions your competitors don’t have. With PSP Products, you’re not just getting parts—you’re gaining a partner in long-term success.



Surge Protective Devices (SPDs)

PSP Products has been a trusted provider of high-quality solutions for the surge protection industry for decades. Every PSP Products SPD is meticulously designed, rigorously tested, and built to deliver reliable, top-tier performance for decades. Along with exceptional functionality and protection, our devices are backed by some of the most competitive warranties in the industry. Their innovative hybrid design ensures consistent, like-new performance even after enduring years of challenging power and environmental conditions.



Protect residential, commercial and industrial electrical systems from electrical surges, brownouts and other voltage disturbances with PSP Products surge protective devices. Our Type 1 surge protective devices are UL 1449 5th Edition Type 1 Listed to US and Candian Standards and meet the National Electrical Code® 2020 230.67 requirements.

	Series A	Series B	Series R	Category 2	Series C	Category 3	Category 4	Category 5
Application	**Secondary**	**Primary**	**Primary**	**Primary**	**Primary**	**Primary**	**Primary**	**Primary**
UL 1449 Listing Type	**Type 1 or Secondary (Depending on Model)**	**Type 1**	**Type 1**	**Type 1**	**Type 1**	**Type 1**	**Type 1**	**Type 1**
Nominal Discharge Current Per Mode (In)	**10kA**	**20kA**	**20kA**	**20kA**	**20kA**	**20kA**	**20kA**	**20kA**
Maximum Discharge Current Per Phase (Imax)	**50kA**	**60kA, 100kA (Depending on Model)**	**120kA**	**100kA**	**120kA–240kA**	**120kA, 240kA (Depending on Model)**	**200kA–400kA (Depending on Model)**	**240kA–750kA (Depending on Model)**
Short Circuit Current Rating (SCCR)	**100kA**	**200kA**	**150kA**	**150kA**	**200kA**	**200kA**	**200kA**	**200kA**
Housing Material	**Polycarbonate**	**Polycarbonate**	**Cast Aluminum**	**Cast Aluminum**	**Polycarbonate**	**Cast Aluminum**	**Steel**	**Steel, Stainless Steel or Polycarbonate**
Environmental Rating	**NEMA 4X, IP65**	**NEMA 4X**	**NEMA 4X, IP65, IP66**	**NEMA 6, IP65, IP66**	**NEMA 4X, IP65, IP66**	**NEMA 4X, IP65, IP66**	**NEMA 4/12/13 Stainless Steel or NEMA 4X Polycarbonaate, IP66**	**NEMA 4/12 or NEMA 4X, IP66**
Lead Length	15”	18”	36”	24”	40”	36”	30”	36”
LED Indicator	●	●	●	●	●	●	●	●
Audible Alarm		●	●	●	●	●	●	●
Surge Counter						●	**Optional**	●
Remote Diagnostic Option						●		●
Warranty	**Lifetime**	**Lifetime**	**Lifetime**	**Lifetime**	**25 Years**	**25 Years**	**25 Years**	**10 Years**
Thermally Protected MOV/ GDT	●	●	●	●		●	●	●
EMI/RFI Noise Filtration			●	●	●	●	●	●
Single-Phase	●	●	●	●	●	●	●	●
Three-Phase			●		●	●	●	●
Page Number	**6**	**7**	**8**	**9**	**10**	**11**	**13**	**14**

VORTEXX™ SERIES A

Type 1 or Type 2 lighting and motor surge protector designed to combine excellent performance, a space saving and flexible design and cost-efficiency. Available in either single-phase/single pole (L-N-G) configurations of 120VAC, 240–277VAC and 480VAC which are UL recognized, or a double pole configuration of 120/240VAC (L-G) which is ANSI/UL 1449 5th edition listed. These units are an excellent choice for protecting downstream HVAC equipment and other hardwired applications up to 100kAIC fault current rating.

- Imax: 50kA
- In: 10kA
- Small footprint
- Thermally protected MOV suppression with gas discharge tube
- LED diagnostic indicator
- Nipple mount or bracket mount installation
- Single pole is a UL recognized component
- Double pole is a UL 1449 5th edition listed component
- NEMA 4X indoor/outdoor enclosure
- Lifetime warranty



Single Pole



Double Pole

Available System Voltages and Wiring Configurations	
120/208-240VAC, 2W+G (Single Pole/Double Pole)	480VAC 2W+G (Single Pole)
240-277VAC, 2W+G (Single Pole)	120VAC, 2 W+G (Single Pole)

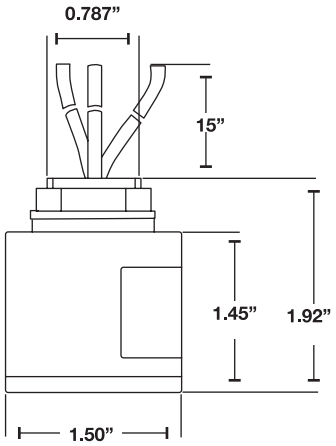

Single Pole

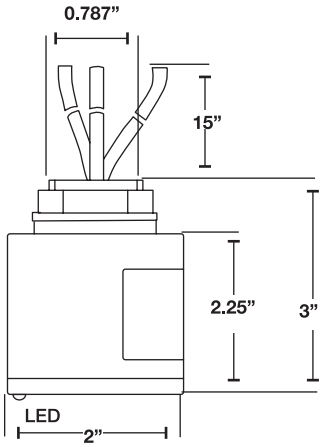

Double Pole

VORTEXX™ SERIES B

Type 1 panel and equipment surge protector ideal for main panel, subpanel and point of use applications up to 200kAIC fault current rating.

- Imax: 60kA or 100kA per phase
- In: 20kA
- Thermally protected MOV suppression with gas discharge tube
- Real-time per phase LED indicators and audible alarm
- Designed for installation inside/outside of electrical enclosure
- NEMA 4X (IP66) indoor/outdoor rated enclosure
- Lifetime warranty

Additional Options

- Flush mount cover - Item# VB-FMC



Available System Voltages and Wiring Configurations
120/240VAC, 2W+G (Single Phase)

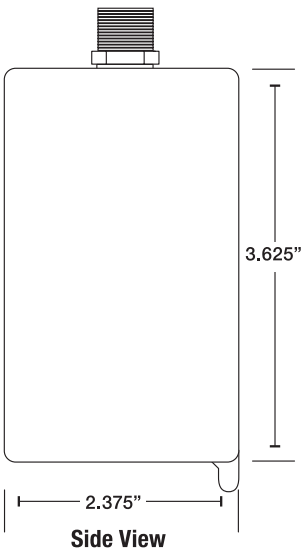

Side View

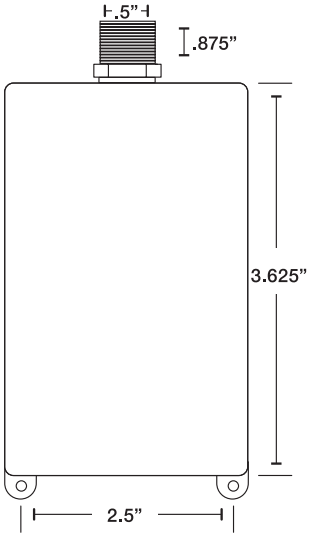

Front View

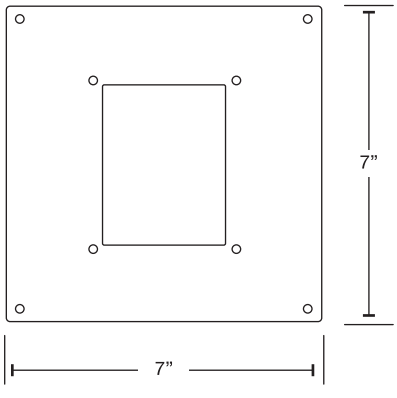

Flush Mount Cover

c UL us LISTED

VORTEXX™ SERIES R

Type 1 panel and equipment surge protector ideal for main panel, subpanel and point of use applications up to 150kAIC fault current rating.

- Imax: 120kA per phase
- In: 20kA
- Thermally protected MOV suppression, capacitive filtering and gas discharge tube
- LED indicator and audible alarm
- EMI/RFI noise filtration (-40db)
- Repositionable face cover allows for label orientation
- Meets UL 96A lightning protection master label
- NEMA 4X (IP65/IP66) indoor/outdoor rated enclosure
- Lifetime warranty
- Available with Series R or Generator label

Additional Options

- Mounting bracket to allow installation inside of electrical panel – Item#s VR-C2-LB, VR-3PH-LB
- Flush mount cover – Item# VR-FMC



Available System Voltages and Wiring Configurations	
120/240VAC, 3W+G (Single Phase)	480VAC, 3W+G (3-Phase Delta)
120/208VAC, 4W+G (3-Phase Wye)	347/600VAC, 4W+G (3-Phase Wye)
120/120/240VAC, 4W+G (3-Phase Hi-Leg Delta)	220/415VAC, 4W+G (3-Phase Wye)
277/480VAC, 4W+G (3-Phase Wye)	240VAC, 3W+G (3-Phase Delta)

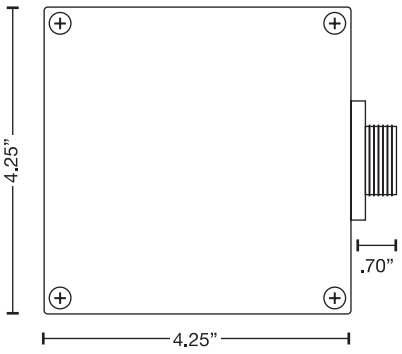

Front View

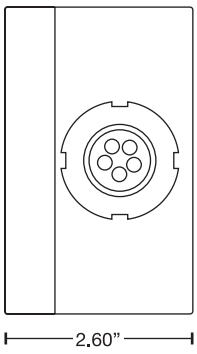

Side View

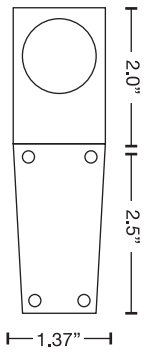

Mounting Bracket

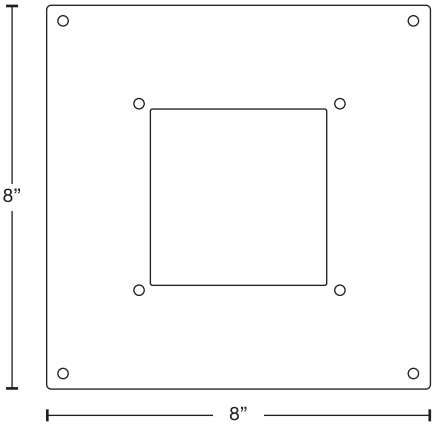

Flush Mount Cover

c UL us LISTED

CATEGORY 2 HURRICANE

Type 1 panel and equipment surge protector ideal for main panel, subpanel and point of use applications up to 150kA SCCR.

- Imax: 100kA per phase
- In: 20kA
- Thermally protected MOV suppression, capacitive filtering and gas discharge tube
- LED indicator and audible alarm
- EMI/RFI noise filtration (-40db)
- NEMA 6 (IP66) indoor/outdoor rated enclosure
- Meets UL 96A lightning protection master label
- Lifetime warranty
- Available with Hurricane, Generator or EV Charger label



Additional Options

- Mounting bracket to allow installation inside of electrical panel – Item# VR-C2-LB
- Flush mount cover – Item# C2-FMC

Available System Voltages and Wiring Configurations
120/240VAC, 3W+G (Single Phase)

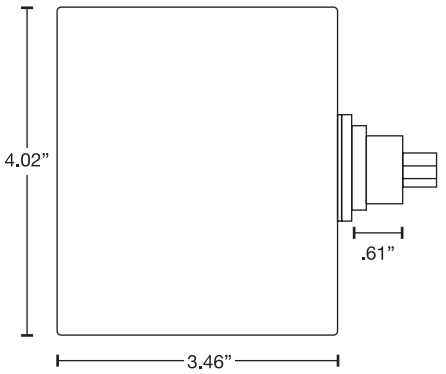

(.5" NPT Adapter Included)

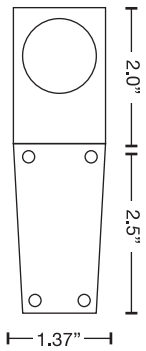

Mounting Bracket

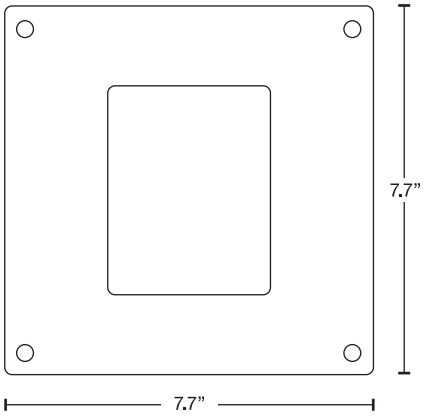

Flush Mount Cover

VORTEXX™ SERIES C

Type 1 panel surge protector provides 200kA SCCR, making it suitable for installation at either service entrance or subpanel locations. Available in 120kA or 240kA Imax and in most voltages up to to 600VAC. Weatherproof, compact enclosures allow for installation in virtually any location.

- Imax: 120 or 240kA per phase
- In: 20kA
- Thermally protected MOV suppression
- Real-time per phase LED indicators
- Sine wave tracking
- EMI/RFI noise filtration (-40db)
- NEMA 4X plastic nipple-mount enclosure
- 25 year warranty
- Made in the USA

Additional Options

- Flush mount cover - Item# VC-FMC



Available System Voltages and Wiring Configurations	
120/240VAC, 3W+G (Single Phase)	480VAC, 3W+G (3-Phase Delta)
120/208VAC, 4W+G (3-Phase Wye)	347/600VAC, 4W+G (3-Phase Wye)
120/120/240VAC, 4W+G (3-Phase Hi-Leg Delta)	220/415VAC, 4W+G (3-Phase Wye)
277/480VAC, 4W+G (3-Phase Wye)	240VAC, 3W+G (3-Phase Delta)

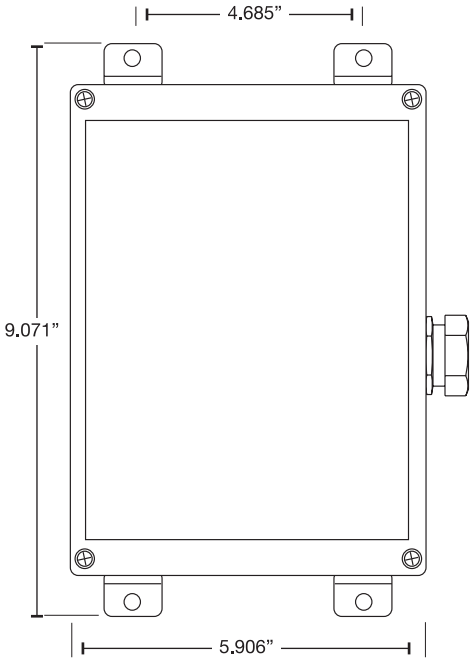

Front View

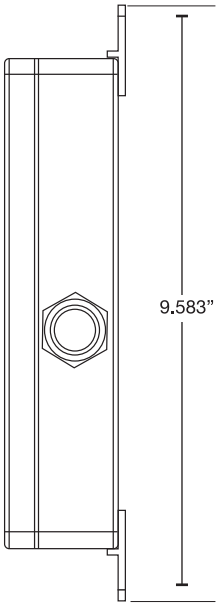

Side View

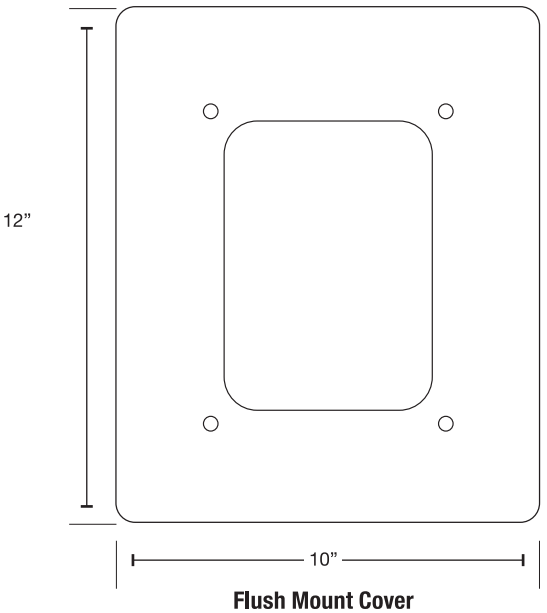

Flush Mount Cover

For full product specifications, visit pspproducts.com
PSP Products | 571.569.0169 | sales@pspproducts.com
c UL us LISTED

CATEGORY 3 HURRICANE

Type 1 panel surge protector built to combine exceptional performance with outstanding value. This multi-stage hybrid design provides “best-in-class” performance. Available for all single and three-phase configurations up to 600VAC.

- Imax: 120 or 240kA per phase
- In: 20kA
- Thermally protected MOV suppression, capacitive filtering and gas discharge tube
- Real-time per phase LED indicators, audible alarm, remote contacts and surge counter are standard
- Smart diagnostic, indicating remaining surge capacity
- Sine wave tracking
- EMI/RFI noise filtration (-40db)
- NEMA 4X (IP66) indoor/outdoor rated enclosure
- 25 year warranty

Additional Options

- Flush mount cover (6” wall depth required) - Item# C3-FMC



Available System Voltages and Wiring Configurations	
120/240VAC, 3W+G (Single Phase)	480VAC, 3W+G (3-Phase Delta)
120/208VAC, 4W+G (3-Phase Wye)	347/600VAC, 4W+G (3-Phase Wye)
120/120/240VAC, 4W+G (3-Phase Hi-Leg Delta)	220/380VAC, 4W+G (3-Phase Wye)
277/480VAC, 4W+G (3-Phase Wye)	240VAC, 3W+G (3-Phase Delta)

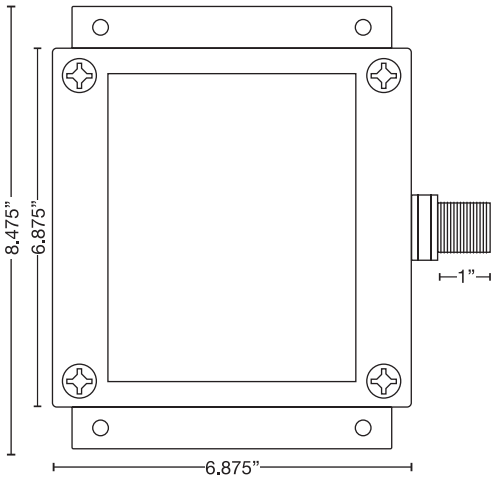

Front View

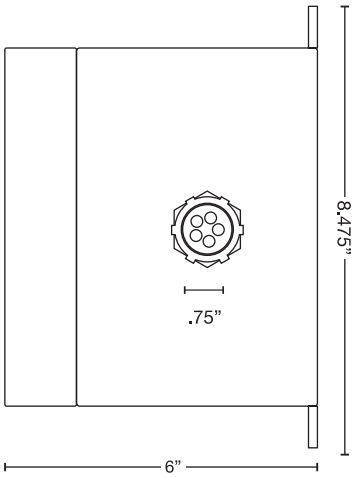

Side View

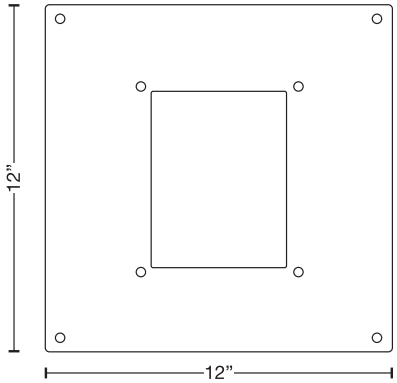

Flush Mount Cover

c UL us LISTED

CATEGORY 3 HURRICANE-RDU

Type 1 panel surge protector allows for the diagnostic readout to be located in a convenient, viewable location, regardless of the installation point of the surge protection device. This multi-stage hybrid design provides “best-in-class” performance. Available for all single and three-phase configurations up to 600VAC.

- Imax: 120kA or 240kA per phase
- In: 20kA
- Thermally protected MOV suppression, capacitive filtering and gas discharge tube
- Real-time per phase LED indicators, audible alarm, remote contacts and surge counter are standard
- Smart diagnostic, indicating remaining surge capacity
- Remote diagnostic allows for the diagnostic readout to be located in a convenient, viewable location, regardless of the installation point of the surge protection device.
- Sine wave tracking
- EMI/RFI noise filtration (-40db)
- NEMA 4X (IP66) indoor/outdoor rated enclosure
- 25 year warranty

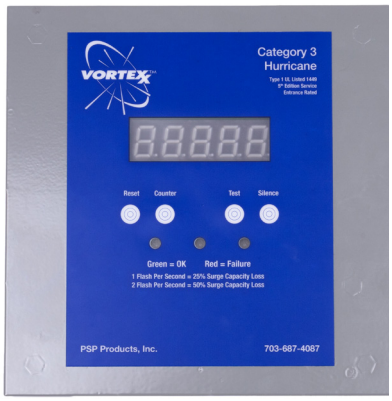



Available System Voltages and Wiring Configurations	
120/240VAC, 3W+G (Single Phase)	480VAC, 3W+G (3-Phase Delta)
120/208VAC, 4W+G (3-Phase Wye)	347/600VAC, 4W+G (3-Phase Wye)
120/120/240VAC, 4W+G (3-Phase Hi-Leg Delta)	220/380VAC, 4W+G (3-Phase Wye)
277/480VAC, 4W+G (3-Phase Wye)	240VAC, 3W+G (3-Phase Delta)

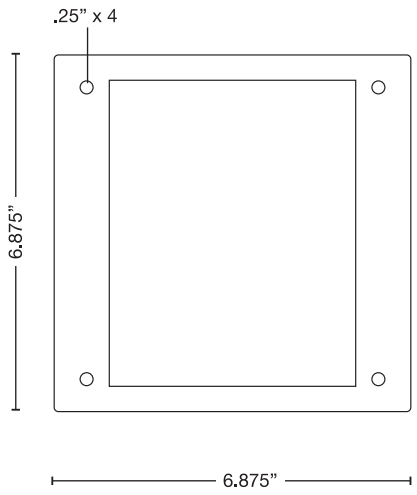

Remote Display

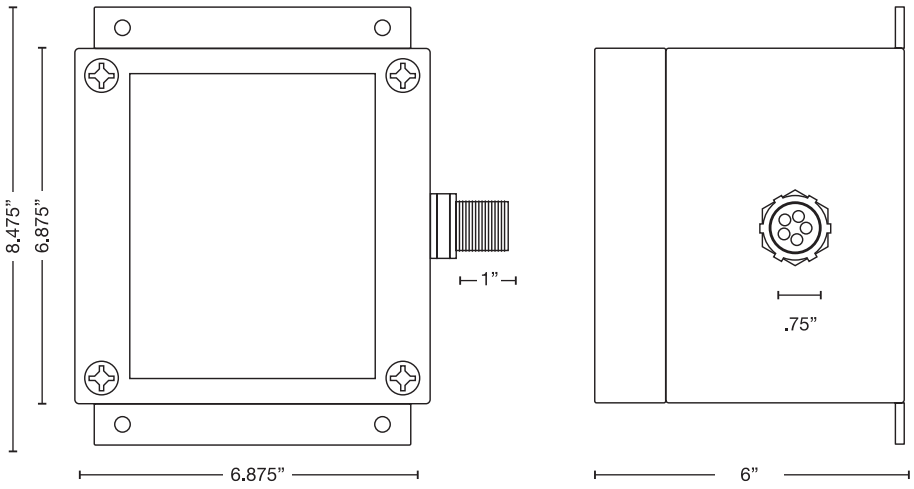

Surge Enclosure

For full product specifications, visit pspproducts.com
PSP Products | 571.569.0169 | sales@pspproducts.com

c UL us LISTED

CATEGORY 4 HURRICANE

Type 1 service entrance and panel surge protector designed for critical panels located in the harshest environments. The Category 4 Hurricane is available for all single and three-phase configurations up to 600VAC.

- Imax: 200 to 400kA per phase
- In: 20kA
- Thermally protected MOV suppression, capacitive filtering and gas discharge tube
- Real-time per phase LED indicators, audible alarm, remote contacts
- Smart diagnostic, indicating remaining surge capacity
- Sine wave tracking
- EMI/RFI noise filtration (-40db)
- NEMA 4/12/13 (IP66) rated enclosure
- 25 year warranty
- Made in the USA



Additional Options

- Surge counter - available on all versions
- NEMA 4X stainless steel
- Flush mount cover - Item# H4-FMC

Available System Voltages and Wiring Configurations	
120/240VAC, 3W+G (Single Phase)	480VAC, 3W+G (3-Phase Delta)
120/208VAC, 4W+G (3-Phase Wye)	347/600VAC, 4W+G (3-Phase Wye)
120/120/240VAC, 4W+G (3-Phase Hi-Leg Delta)	220/380VAC, 4W+G (3-Phase Wye)
277/480VAC, 4W+G (3-Phase Wye)	240VAC, 3W+G (3-Phase Delta)

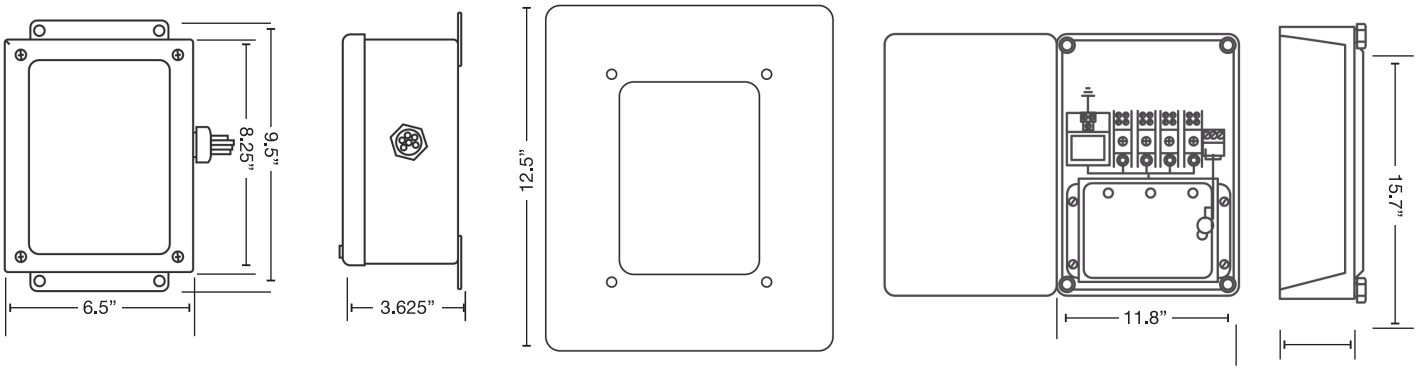

Flush Mount Cover

CATEGORY 5 HURRICANE

Type 1 service entrance and panel surge protector that provides state-of-the-art protection from 240kA–750kA per phase. All models come with all mode protection with replaceable modules by mode, eliminating unnecessary down time and costly repair or replacement.



- Imax: 240–750kA per phase
- In: 20kA
- Thermally protected MOV suppression, capacitive filtering and gas discharge tube
- Real-time LED indicators, audible alarm with silence remote contacts, push to test and surge counter with reset
- Sine wave tracking
- EMI/RFI noise filtration (-40db)
- Field replaceable modules
- All Mode Protection
- NEMA 4 (IP66) enclosure
- Made in USA
- 10 year warranty

Additional Options

- External disconnect
- NEMA 4X stainless steel, polycarbonate

Available System Voltages and Wiring Configurations	
120/240VAC, 3W+G (Single Phase)	480VAC, 3W+G (3-Phase Delta)
120/208VAC, 4W+G (3-Phase Wye)	347/600VAC, 4W+G (3-Phase Wye)
120/120/240VAC, 4W+G (3-Phase Hi-Leg Delta)	220/380VAC, 4W+G (3-Phase Wye)
277/480VAC, 4W+G (3-Phase Wye)	240VAC, 3W+G (3-Phase Delta)

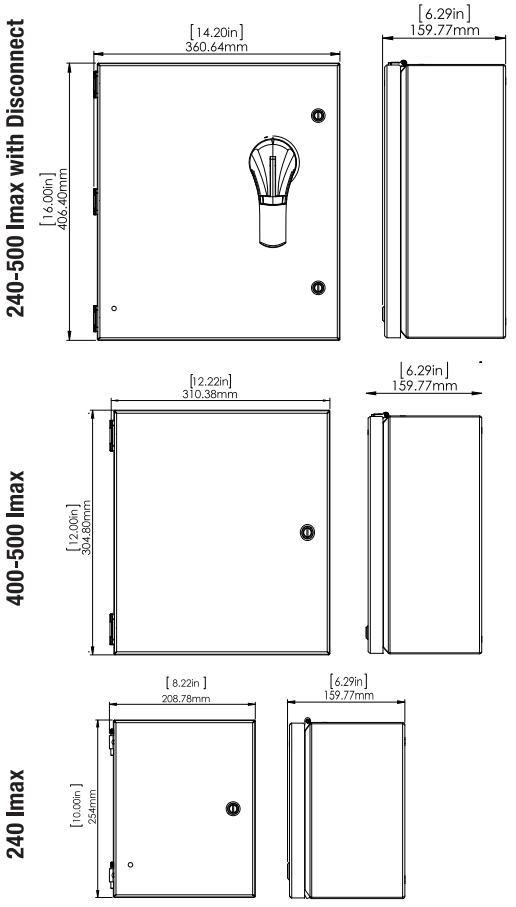

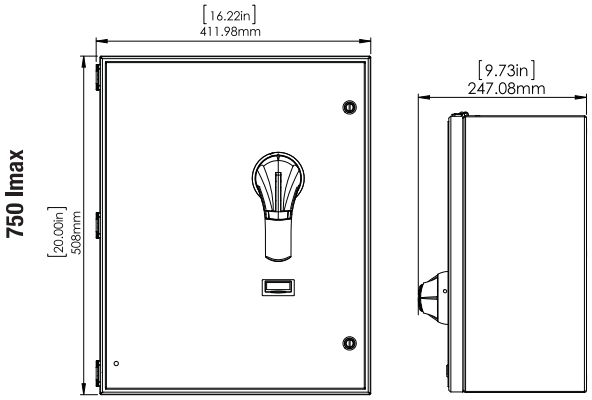

For full product specifications, visit pspproducts.com
PSP Products | 571.569.0169 | sales@pspproducts.com

c UL us LISTED

CATEGORY 5 HURRICANE-RDU

Type 1 service and panel surge protector allows for the diagnostic readout to be located in a convenient, viewable location, regardless of the installation point of the surge protection device. This series provides state of the art protection from 240kA–500kA per phase. Available for all single and three-phase configurations up to 600VAC.

- Imax: 240-500kA per phase
- In: 20kA
- Thermally protected MOV suppression, capacitive filtering and gas discharge tube
- Real-time LED indicators, audible alarm with silence remote contacts, push to test & surge counter with reset
- Sine wave tracking
- EMI/RFI noise filtration (-40db)
- Field replaceable modules
- NEMA 4 (IP66) enclosure
- Made in USA
- 10 year warranty





Available System Voltages and Wiring Configurations	
120/240VAC, 3W+G (Single Phase)	220/380VAC, 4W+G (3-Phase Wye)
120/208VAC, 4W+G (3-Phase Wye)	240VAC, 3W+G (3-Phase Delta)
277/480VAC, 4W+G (3-Phase Wye)	

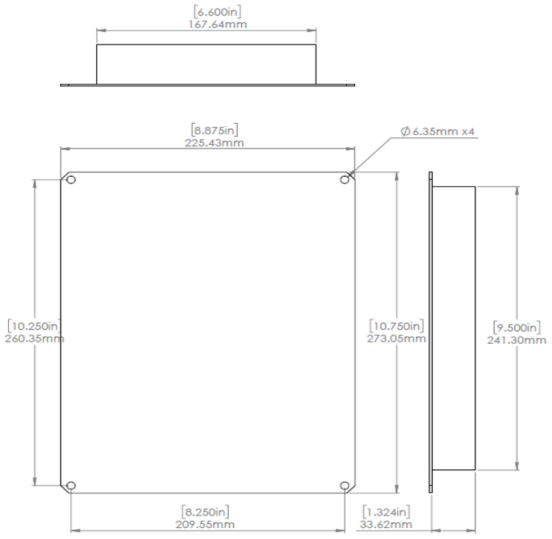

Remote Display

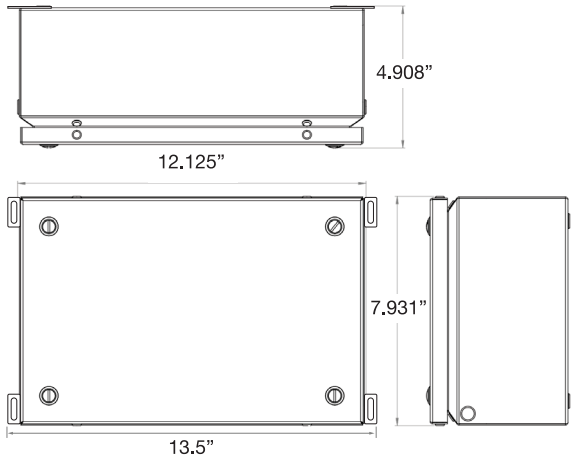

Surge Enclosure

c UL us LISTED

KGSP-1

The KGSP-1 generator control circuit surge protector provides a complete level of protection for a generator and ATS. This device protects all control lines (120V charge circuit, 12V sensing circuit and 120/240V signal control lines) from transient spikes between the generator and the ATS.



- Imax per mode: 25kA sensing circuit and charge circuit, 8kA signal control lines
- In: 10kA
- Universal design supports compatibility with most generators or transfer switches and can be installed at the generator, the ATS, or both
- Flange mount for installation flexibility
- Replaceable terminal strip for quick replacement
- Diagnostic LED monitors protection
- NEMA 1 ABS Plastic
- 5 year warranty

KSP-3DRM

The KSP-3DRM generator dataline and control circuit surge protector provides a complete level of protection for a generator and ATS. This device protects all control lines (120V charge circuit, 12VDC and RS485 data) from transient spikes between the generator and the ATS.

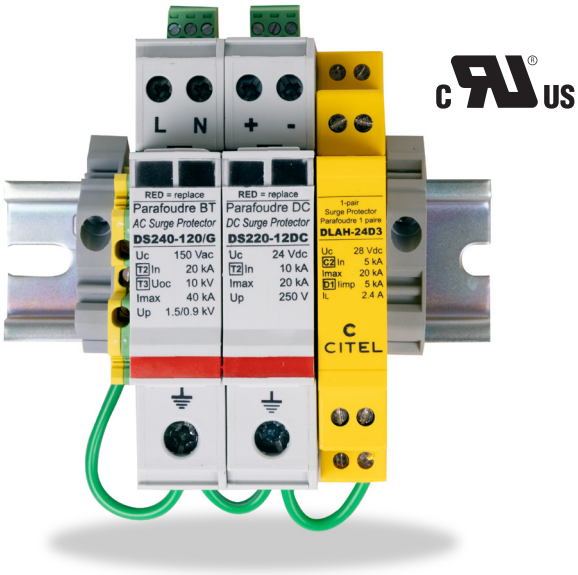

- Imax: 25kA charge circuit, 8kA 12VDC and RS485 data lines
- In: 20kA charge circuit, 10kA 12VDC and 5kA RS485 data lines
- Designed to work with Kohler generators
- Installs at either (or both of) the generator and ATS
- DIN-rail mount for installation flexibility
- Replaceable modules for quick replacement
- Dry contacts for remote monitoring
- NEMA 1
- 5 year warranty

For full product specifications, visit pspproducts.com
PSP Products | 571.569.0169 | sales@pspproducts.com

GSP-50

Surge protector designed to work with Generac® RTS transfer switches.

- Maximum discharge current (Imax): 50kA
- Nominal discharge current (In): 20kA
- Maximum continuous voltage (MCOV): 150VAC
- Voltage protection rating (VPR): 700VAC
- Short circuit current rating (SCCR): 100kA
- Thermally protected MOV suppression
- LED diagnostic indicator
- 5 year warranty

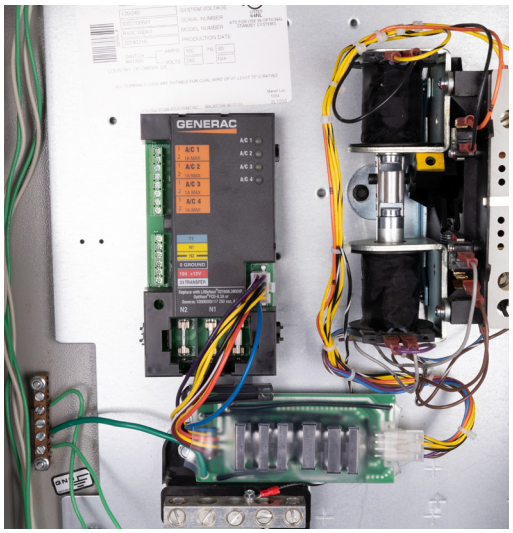

GSP-50 Installed

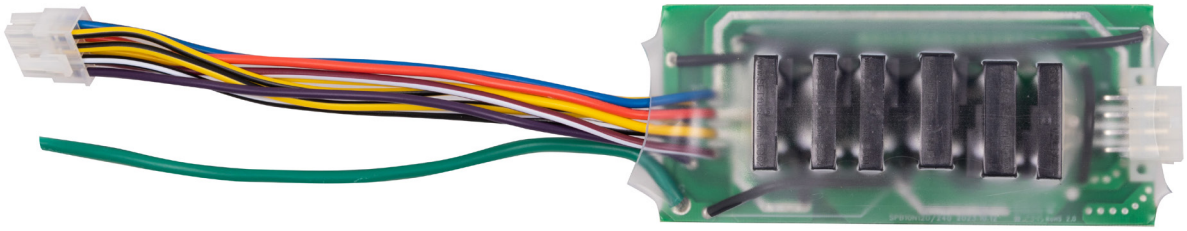

DIN-RAIL AC SURGE PROTECTOR



- Available from 40kA–100kA capacity
- Dry contacts and visual indicators available on all products

DIN-RAIL DC SURGE PROTECTOR



- Surge protection from 12VDC–350VDC
- These devices are based on high energy varistors (MOV) matched with the DC operating voltage (from 12VDC–350VDC). The MOVs are equipped with internal thermal disconnectors in order to provide safe end of life.

PSP8X09-F-FF



- Coaxial surge protectors designed to protect antennas, microwaves, broadband applications, two-way radios, cellular, GPS, CATV and CCTV equipment
- Imax: 20 kA per phase
- Gas-tube technology

PSRPJ45-CAT5E



- The PSRPJ45 series is designed to protect sensitive data-monitoring equipment connected to various network protocols from transient over voltages
- 10/100/1000 Base T compatible
- Shielded RJ45 connectors

Load Management Systems

PSP Products is a recognized leader in load management systems, pioneering innovative solutions that set industry standards. Our notable achievements include introducing magnetic latching relays, eliminating hum and chatter, for loads up to 200A, and developing wireless load management systems for loads up to 200A.

Our electric vehicle (EV) charger load management solutions enable seamless integration of new loads into main service or sub-panels that are at risk of overload. Equipped with an intelligent onboard micro-controller, these systems continuously monitor the panel's load capacity, granting access to the additional load only when sufficient capacity is available.



EV CHARGER LOAD MANAGEMENT

The PSP Products line of electric vehicle (EV) charger load management systems allow loads to be added to any main service panel or sub panel that will become overloaded, when a new load is introduced.

The onboard intelligent micro-controller monitors the load on the existing panel and only allows the added load access to the panel when capacity is available.

- Adapts to any application using the precision field adjustable set points. These maximize access to the added load and prevent looping.
- Field adjustable set points include: panel overload amperage, overload inrush cutoff delay, restore amperage threshold, load restore delay time and line-loss compensation adjustment for CTs. Controller LCD displays actual real-time amperage on panel.
- Prevents overloading and saves costly upgrades to panel and/or electrical infrastructure.
- Controller is self-powered from line in voltage. External power supply not required. Can control 120VAC single pole or 208–240VAC double pole circuits.
- Utilizes a magnetic latching relay for long-te rm reliability, and box-lug in and out terminals for ease of installation.
- Complies with NEC 2023 Art. 750, as permitted by Art. 220.70 (Energy Management Systems)
- Comes standard with 250A split core CTs. 100A and 500A split core CTs are available at additional cost.
- CTs prewired with 12’ #18 AWG shielded UL approved leads
- Made in the USA



Custom EV Charger Load Management Systems for Multi-Unit Dwelling Available

SAK-60MS SERIES

EV load management designed for installation of electric vehicle chargers (EVC) and other load management / applications. Allows loads up to 60A to be added to any main service panel or sub panel that will become overloaded, when a new load is introduced. SAK-60MSD-M comes with one 40, 50, or 60A internal disconnect.



- Can be installed in line with the load on any main or sub panel up to 400A to add managed loads up to 60A continuous.
- SAK-60MS comes in a standard polycarbonate NEMA 4X enclosure (not pictured).
- SAK-60MS-M comes in a standard NEMA 3R steel enclosure.
- SAK-60MSD-M features a 40A (SAK60MSD-M-40), 50A (SAK-60MSD-M-50), or 60A (SAK-60MSD-M-60) internal disconnect and comes standard in a NEMA 3R steel enclosure.
- UL listed to US and Canadian safety standards
- 3 year warranty

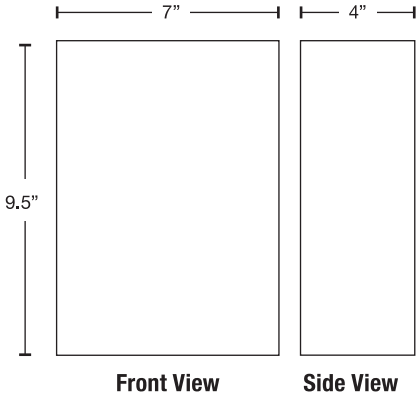

Standard NEMA 4X Polycarbonate Enclosure

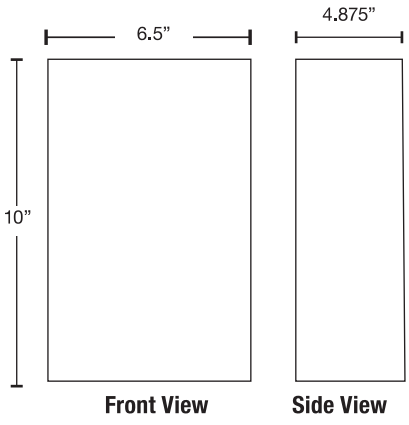

Standard NEMA 3R Metal Enclosure

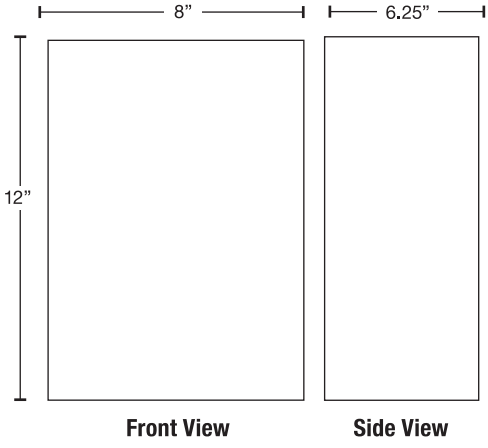

Standard NEMA 3R Metal Enclosure Disconnect Versions

For full product specifications, visit pspproducts.com
PSP Products | 571.569.0169 | sales@pspproducts.com

c UL us LISTED

SAK-100MS-M SERIES

EV load management designed for installation of electric vehicle chargers (EVC) and other load management / applications. Allows loads up to 100A to be added to any main service panel or sub panel that will become overloaded, when a new load is introduced. SAK-100MS-M installation requires open breaker space or quad breaker. SAK-100MSD-M-100 comes with one 100A internal disconnect.

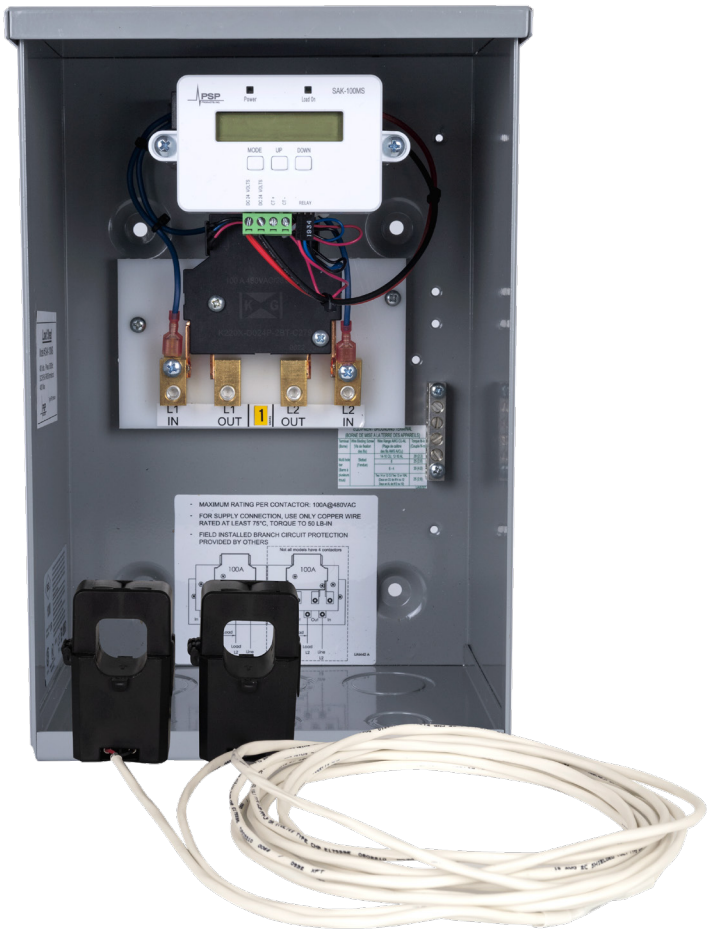

- Can be installed in line with the load on any main or sub panel up to 400A to add managed loads up to 100A continuous.
- Comes standard in NEMA 3R steel enclosure
- SAK-100MSD-M-100 features one 100A internal disconnect (not pictured)
- UL listed to US and Canadian safety standards
- 3 year warranty

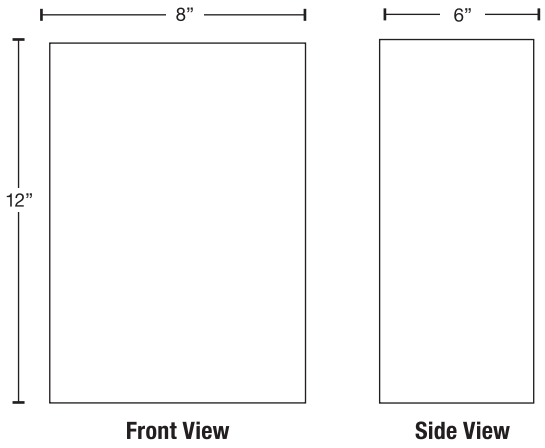

Standard NEMA 3R Metal Enclosure

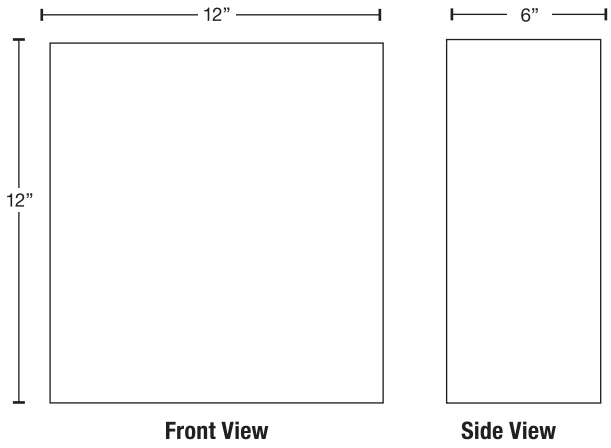

Standard NEMA 3R Metal Enclosure Disconnect Versions

c UL us LISTED

SAK-2-100MS-M SERIES

EV load management designed for installation of electric vehicle chargers (EVC) and other load management / applications. Allows 2 loads up to 100A to be added to any main service panel or sub panel that will become overloaded, when a new load is introduced. SAK-2-100MSD-M-100 comes with two 100A internal disconnects.

- Manages loads of 2 EV chargers up to 100A each
- Can be installed in line with the load on main or sub panel up to 800A and add 2 managed loads up to 100A each
- Comes standard in NEMA 1 enclosure (NEMA 3R option also available)
- SAK-2-100MSD-M-100 features two 100A internal disconnects (not pictured)
- UL listed to US and Canadian safety standards
- 3 year warranty



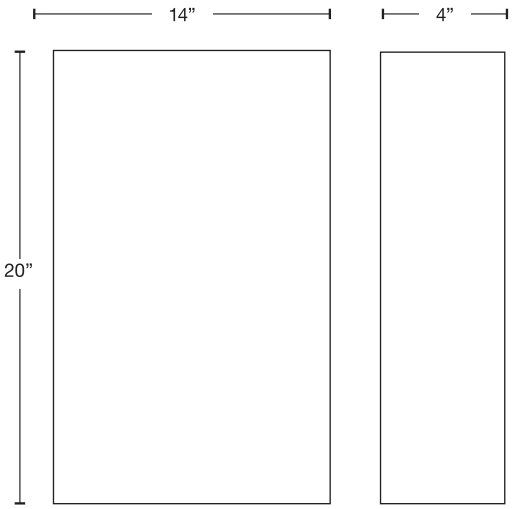

Front View **Side View**

Standard NEMA 1 Enclosure

For full product specifications, visit pspproducts.com

c UL us LISTED

SAK-4-100MS-M SERIES

EV load management designed for installation of electric vehicle chargers (EVC) and other load management / applications. Allows 4 loads up to 100A to be added to any main service panel or sub panel that will become overloaded, when a new load is introduced.

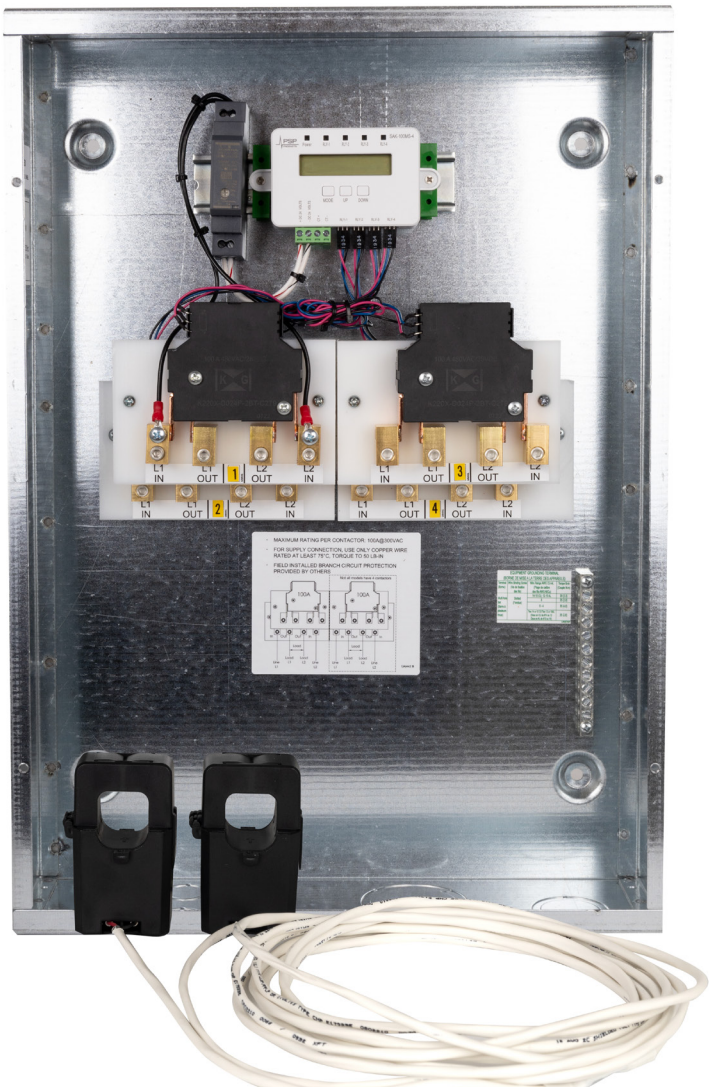

- Manages loads of 4 EV chargers up to 100A each
- Can be installed in line with the load on main or sub panel up to *800A and add 4 managed loads up to 100A each
- Comes standard in NEMA 1 enclosure (NEMA 3R option also available)
- UL listed to US and Canadian safety standards
- 3 year warranty
- * Requires higher amperage CTs

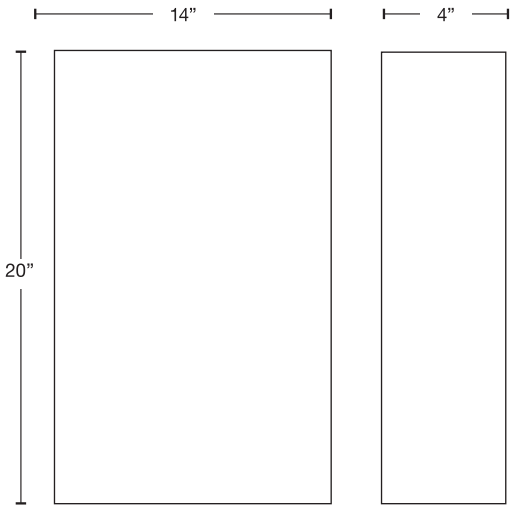

Front View **Side View**

Standard NEMA 1 Enclosure

c UL us LISTED

For full product specifications, visit pspproducts.com
PSP Products | 571.569.0169 | sales@pspproducts.com

SAK-200MS-M SERIES

EV load management designed for installation of electric vehicle chargers (EVC) and other load management / applications. Allows up to a single 200A load to be added to any main service panel or sub panel that will become overloaded when a new load is introduced.

- Can be installed on any main or sub panel up to 400A to add managed load up to 200A
- Comes standard in NEMA 3R enclosure
- UL listed to US and Canadian safety standards
- 3 year warranty



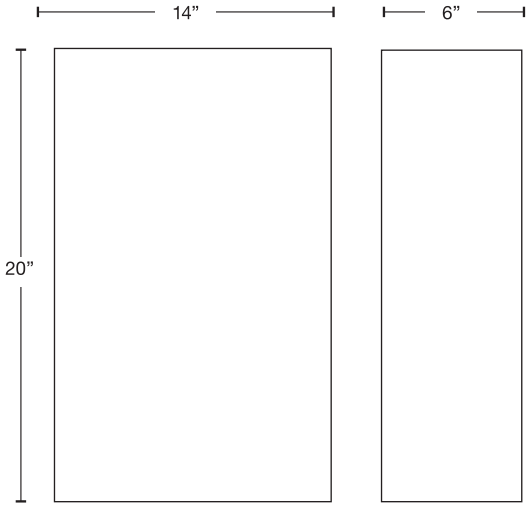

Front View **Side View**

Standard NEMA 3R Enclosure

For full product specifications, visit pspproducts.com

PSP Products | 571.569.0169 | sales@pspproducts.com

c UL us LISTED

SAK-24

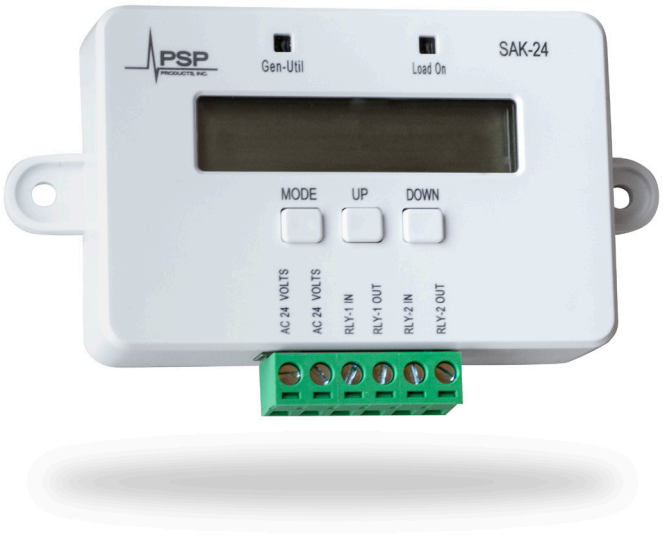

This low-voltage wireless load management device controls electrical loads using a form “C” dry contact. The contacts are rated for up to 5A at 250VAC. Powered by 24VAC, the SAK-24 can draw power from any point within the electrical system. It operates independently, requiring no connection or control wiring to the generator or transfer switch.

Once a power outage occurs, and generator power engages, the SAK-24 analyzes the AC power from the input. When generator voltage is detected, the relay will either manage or lockout the load based on user programming. The SAK-24 will continously monitor the AC line waveform. When utility power returns the load is restored after adjustable period of time and the SAK-24 will enter sleep mode until the next outage occurs.

- NO/NC dry-contact control input
- 2 control dry contacts
- Compact size with mounting flanges for surface mount installation
- User adjustable startup delay and under frequency restoration timers provide an unlimited number of devices with custom priority settings
- Adjustable frequency drop out settings and delay times for under frequency detection
- Precision adjustments from 50.0 to 59.9 Hz for frequency and from 00.1 to 10.9 seconds delay before load shedding
- Overload detection locks out connected device for an adjustable period of time whenever the restored load overloads a generator
- Switches at zero cross over point for maximum life expectancy
- Easy to program
- UL listed to US and Canadian safety standards
- 3 year warranty

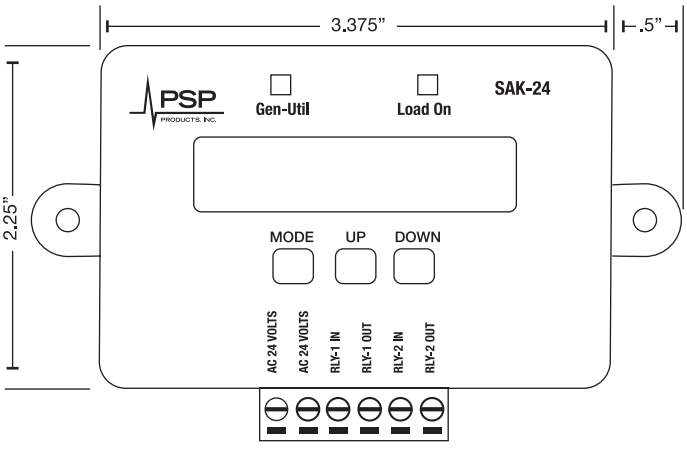

Front View

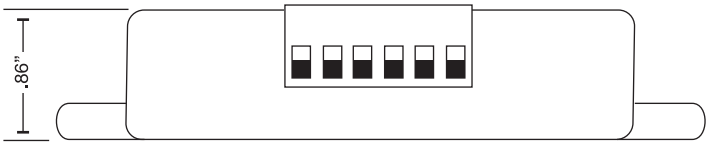

End View

c UL us LISTED

For full product specifications, visit pspproducts.com
PSP Products | 571.569.0169 | sales@pspproducts.com

SAK-60

This revolutionary and versatile 60A wireless load management solution allows you to either lock out the load during utility power loss, or manage the load, based on frequency when the generator is running. Preconfigured for air-cooled systems, the SAK-60 also features adjustable frequency and distortion settings, making it compatible with many liquid-cooled generators as well.



- Magnetic latching relays capable of 60A continuous motor loads
- SAK-60 device self-powered from line-in to managed load
- Switches at zero cross over point for maximum life expectancy
- Easy to program with no need for a computer or additional programming tools
- Universal DIN-rail mount receiver
- Accepts wire size up to #3 AWG
- Complies with NEC 2023 Art. 750, as permitted by Art. 220.70 (Energy Management Systems)
- UL listed to US and Canadian safety standards
- 3 year warranty

Additional Options

- SAK-60 unit installed in 7 x 9.5 x 4 NEMA 4X enclosure - Item# SAK-60-C



Optional SAK-60-C

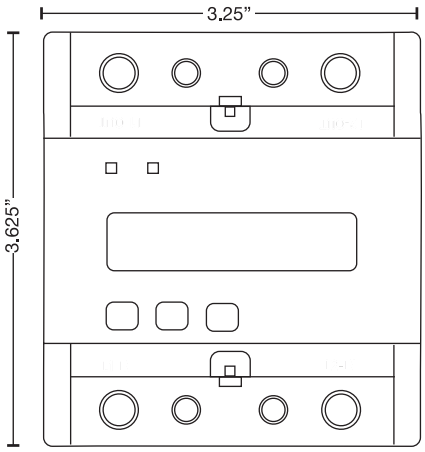

Top View

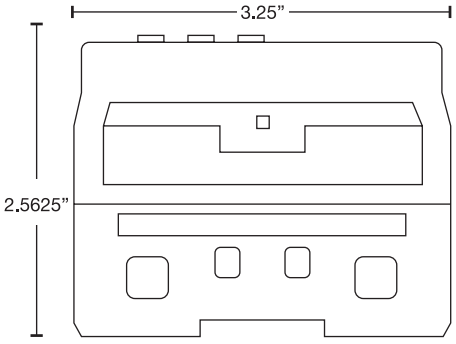

End View

For full product specifications, visit pspproducts.com
PSP Products | 571.569.0169 | sales@pspproducts.com

c UL us LISTED

BX SERIES

Universal magnetic latching load-shedding relay works with any transfer switch or control circuit to quickly lock out or manage loads up to 200A.



- Wireless (air-cooled generators only) or dry contact under frequency load management
- Wireless option includes priority time delay of 3–6 minutes
- 2 load or 4 load relay versions are available
- Features magnetic latching relays, eliminating the typical humming, chattering, and heat generation associated with traditional contactors
- Available as a 100A or 200A single-phase, or 100A or 200A (wired controller only) three-phase
- UL 508 (US & CA) listed control panel
- 5 year warranty

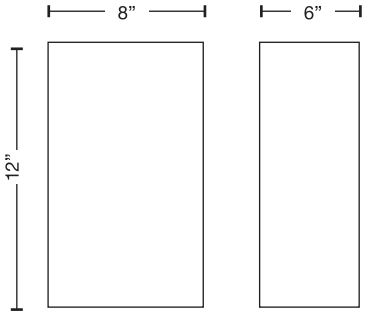

Single-Phase 100A Latching Relay

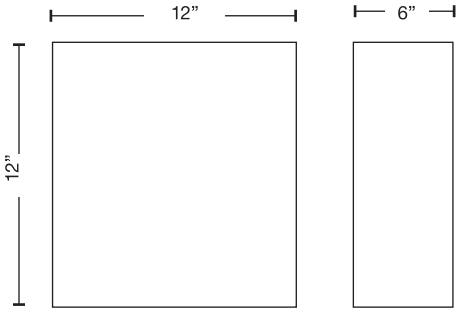

Three-Phase 100A Latching Relay

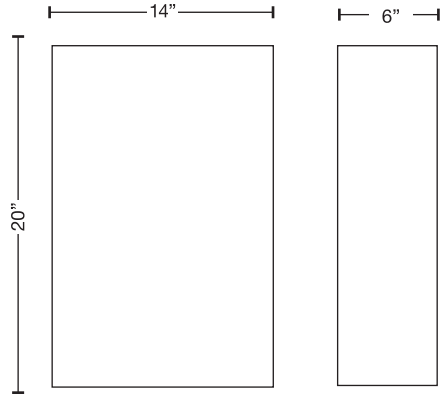

Single-Phase 200A Latching Relay

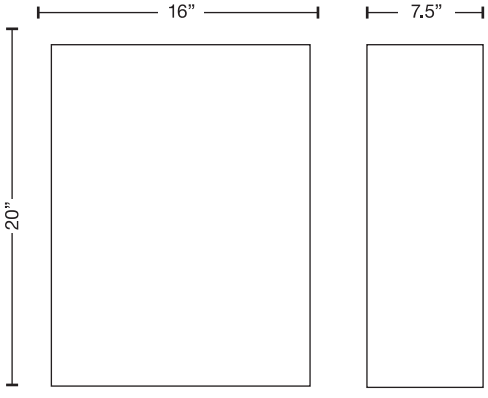

Three-Phase 200A Latching Relay

c UL us LISTED

LSC SERIES

Programmable load-shedding controller utilizes current transformers to monitor the generator's actual current, ensuring precise load management to prevent overloading.



- Robust programming features allow for customization to meet almost any application
- Input voltage: 120VAC with 24VDC power supply
- 100A, 25A and 500A split core current transformers (CTs) are sold separately
- Field programmable with front panel controls (no laptop or programming tool required)
- Available in single-phase or three-phase
- Available in 4, 8, and 12 load configurations
- Small DIN-rail mount footprint allows for installation in most transfer switches
- Easy to program
- UL 508 (US & CA) listed control panel
- 3 year warranty

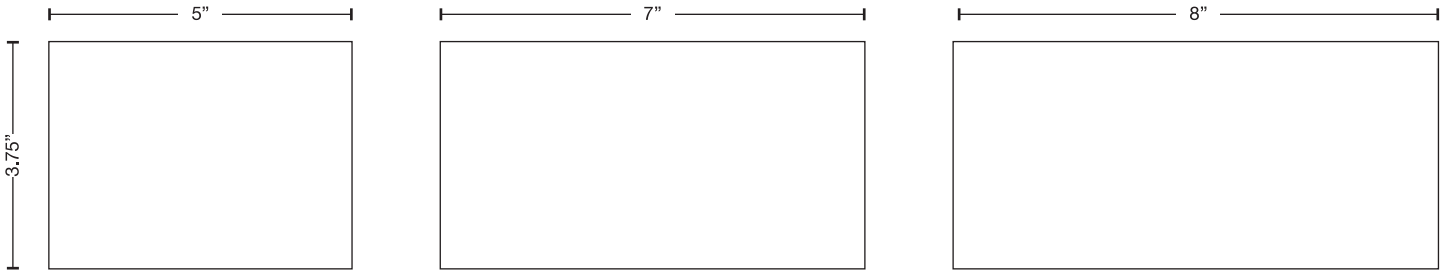

LSC-04 **LSC-08** **LSC-12**

For full product specifications, visit pspproducts.com
PSP Products | 571.569.0169 | sales@pspproducts.com

c UL us LISTED

EX SERIES

Universal normally closed load-shedding system equipped with standard 120VAC coils, designed to integrate seamlessly with Kohler's RXT load shed controller. The EX series outputs 120VAC to the coil, opening the relay to manage loads as needed.

- Box lug termination
- Small footprint, standard open frame configuration
- 3 inch enclosure allows for flush mounting on a 2x4 stud with flush-mount cover
- UL 508 (US & CA) listed control panel
- 5 year warranty



Additional Options

- Individual normally closed relays in 12VDC, 24VAC, or 240VAC - Item# NCR-50A

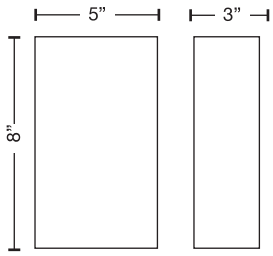

1 Relay, NEMA 1 Enclosure

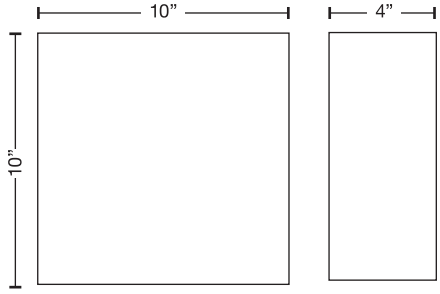

2 Relays, NEMA 1 Enclosure

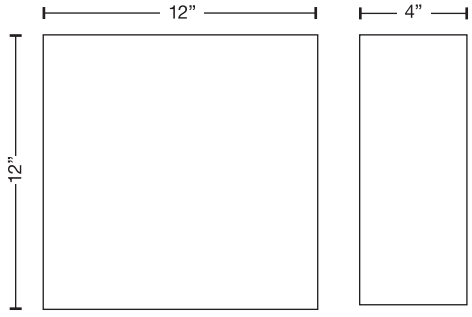

3 or 4 Relays, NEMA 1 Enclosure

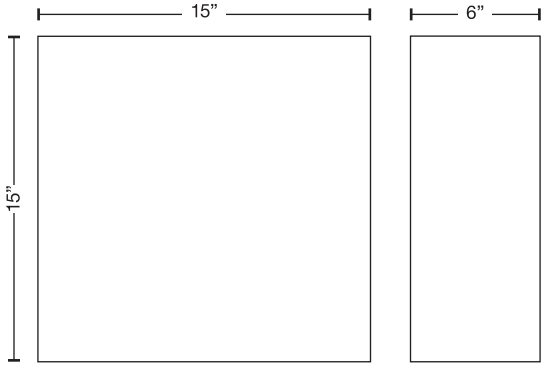

4 Relays, NEMA 3R Enclosure

c UL us LISTED

LX SERIES

Universal magnetic latching load management device allows you to connect directly to any Kohler®, Generac® or Cummins® load shedding module – including the new Generac® low voltage board – to control 4 circuits from 20A–100A each.

- Universal load shedding system works with almost any generator or transfer switch in managing 2 or 4 circuits from 20 to 100A each
- Utilizes magnetic latching relays eliminating the normal humming, chattering and heat associated with contactors
- Either NEMA 1 or NEMA 3R steel enclosure
- Flush mount version fits inside of studs and optional flush mount cover extends .75” past edge of can on all 4 sides for finished walls
- UL 508 (US & CA) listed control panel
- 5 year warranty



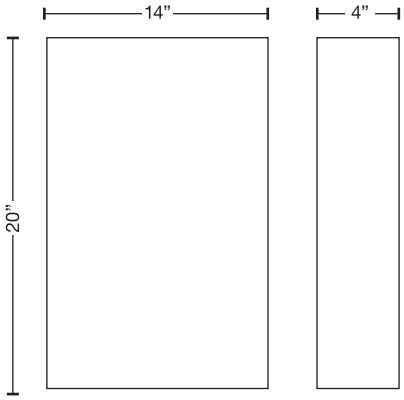

2 or 4 Relays, NEMA 1 Enclosure

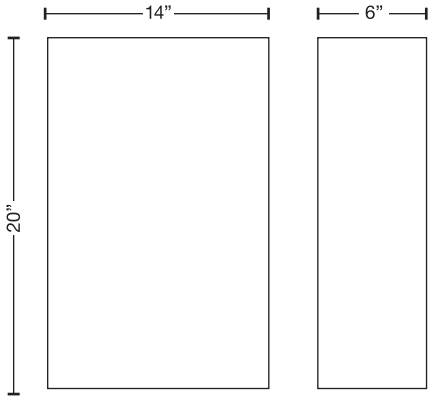

2 or 4 Relays, NEMA 3R Enclosure

For full product specifications, visit pspproducts.com
PSP Products | 571.569.0169 | sales@pspproducts.com

c UL us LISTED

Transfer Switch Devices

PSP Products manufactures unique specialty transfer switch devices that you can't find anywhere else. From our Kohler RXT extenders, to our 2-wire start converters, we offer a solution to get the job done. We offer options for single phase and most three-phase applications.

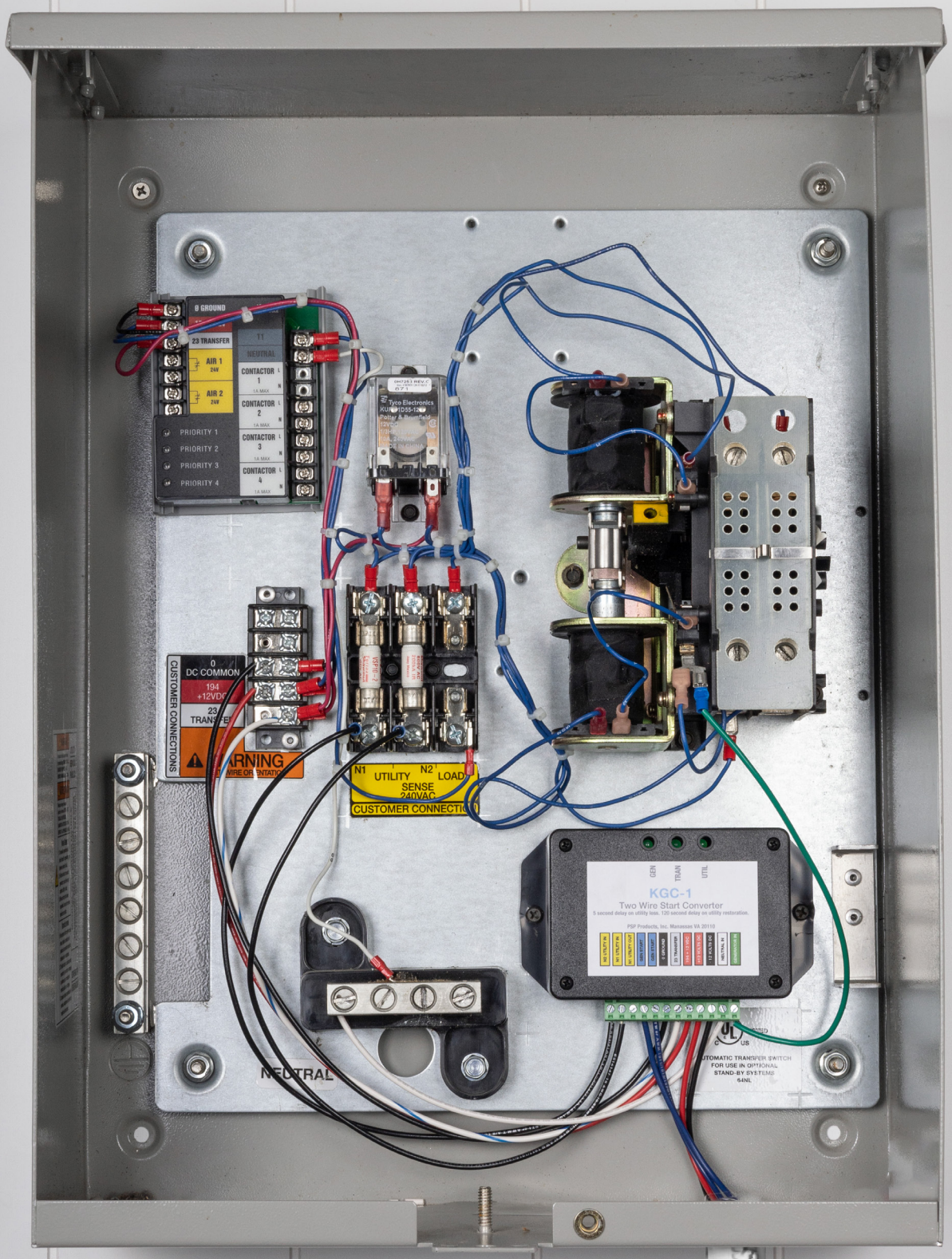

KTSE-1

Kohler® RXT transfer switch expander allows you to daisy chain multiple RXT transfer switches. Works with Kohler RXT-JFNC models up to 200A.



- Eliminates need for RDT switch as slave switch
- Comes with all components needed for easy installation into transfer switch enclosure where control board was located
- Transfer switch control board harness (P13 connector), plugs into jumper connector provided with KTSE-1 for added safety
- LED illuminates upon transfer to generator power
- Maintenance free, requires no batteries or adjustments
- RXT control board can be removed from secondary transfer switches
- One unit required for each secondary switch being installed
- 5 year warranty

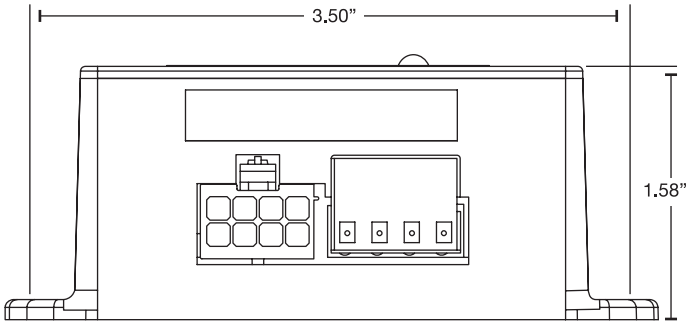

Front View

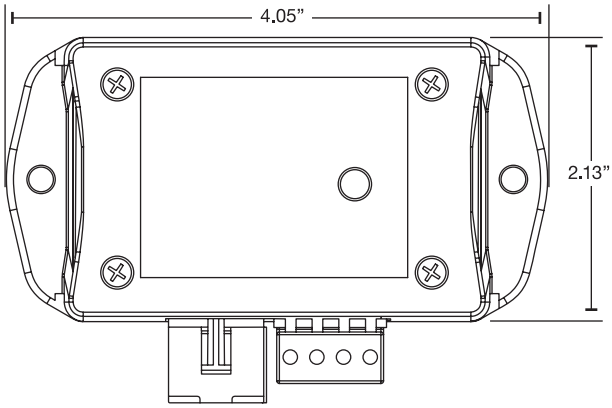

Top View

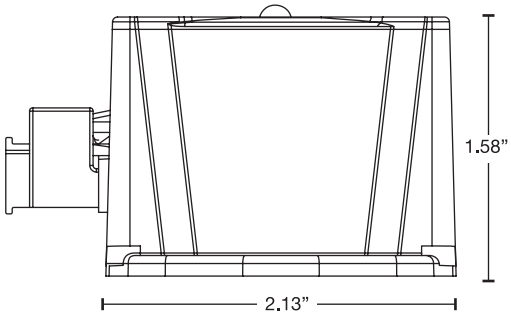

Side View

For full product specifications, visit pspproducts.com
PSP Products | 571.569.0169 | sales@pspproducts.com

KTSE-3

Kohler RXT transfer switch expander allows you to daisy chain multiple 120/208VAC three-phase RXT transfer switches up to 200A.



- Allows use of cost-effective RXT switches for three-phase application
- Transfer switch control board plug connects directly into the RXT expander
- LED illuminates upon transfer to generator power
- Maintenance free, requires no batteries or adjustments
- RXT control board can be removed from secondary transfer switches
- Small footprint that easily installs in transfer switch enclosure where control board was located
- One unit required for each secondary switch being installed
- 3 year warranty

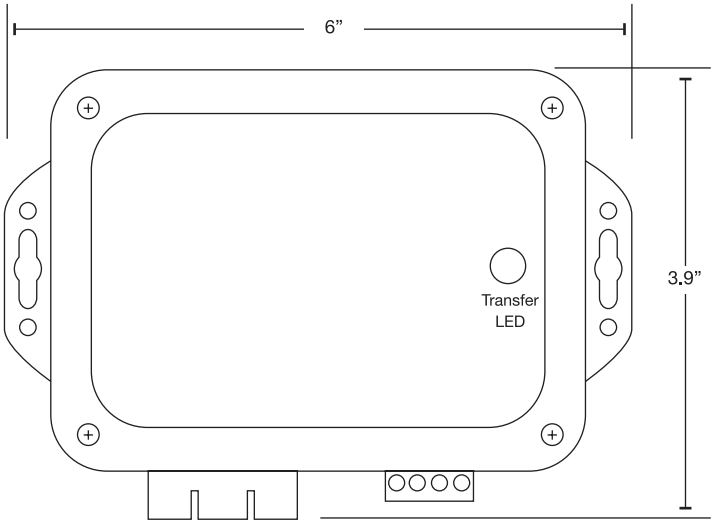

Top View

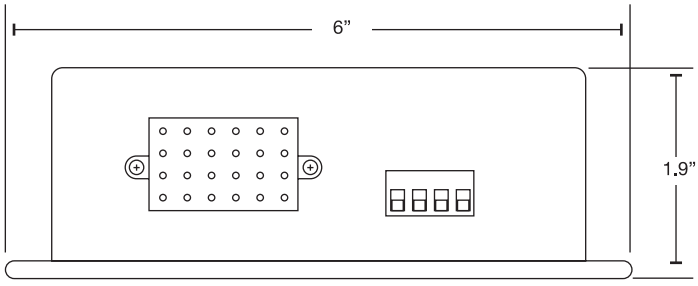

Side View

KTWS-1



Kohler® RBUS to 2-Wire Start Converter allows a 2-wire start generator to be installed without having to change the transfer switch or the wiring between the transfer switch and generator.

- Works with all single-phase Kohler RXT models
- Provides the necessary voltage sensing, timing functions and switching circuits required for automatic operation
- Converts from RBUS connections to 2-wire start
- Connects to any 2-wire start generator
- Adjustable settings for utility loss timer, generator cool-down timer and utility return transfer timer
- LED lights indicate utility mode, generator mode, and transfer
- Connects to factory P-13 connector for easy installation
- 3 year warranty

Additional Options

- Weekly exercise timer – Item# DTS-1

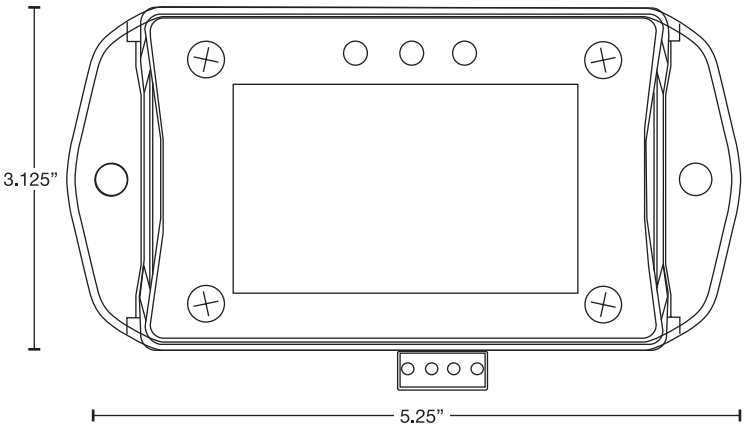

Top View

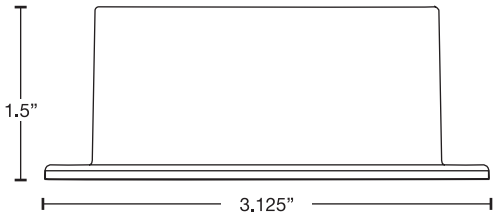

Side View

For full product specifications, visit pspproducts.com
PSP Products | 571.569.0169 | sales@pspproducts.com

KGC-1

240VAC or 208VAC sensing ATS to 2-wire start converter converts a 240V or 208V sensing transfer switch to a 2 wire start transfer switch.

- Allows any 2-wire start generator to be installed without having to change the transfer switch or wiring between the transfer switch and generator
- Provides the necessary voltage sensing, timing functions and switching circuits required for automatic operation
- Works with Generac® and Briggs & Stratton® transfer switches
- Adjustable settings for utility loss timer, generator cool-down timer and utility return transfer timer
- LED lights indicate utility mode, generator mode, and transfer
- Models with additional voltages available
- 5 year warranty

Additional Options

- Weekly exercise timer – Item# DTS-1



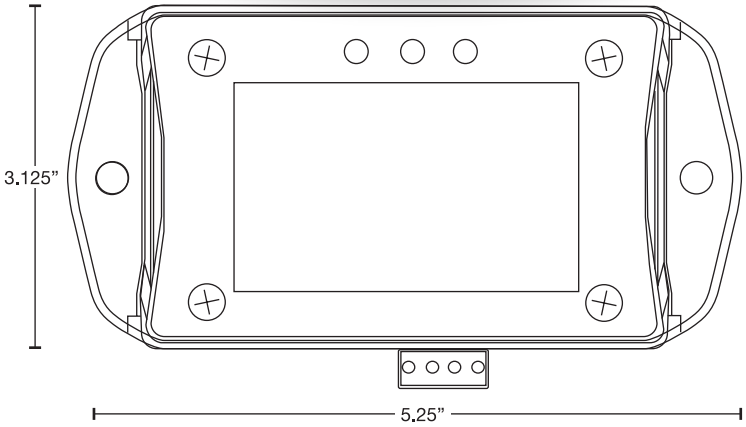

Top View

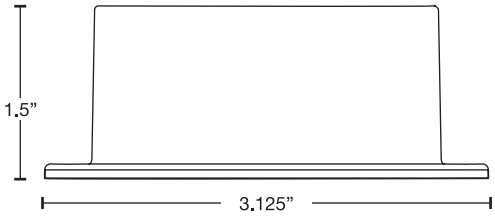

Side View

GOUCO

Over/under voltage protector designed to work with Generac® automatic transfer switches.



- The over voltage turn off is set at 260V
- The under voltage turn off is set at 220V
- Disconnect is instantaneous upon reaching the over/under voltage set points
- There is a 90 second delay before restoring power once unit turns power off
- LED diagnostic indicator
- 5 year warranty

PSP Products has served the industrial, commercial, utility and residential markets for over 30 years by providing superior products and services. From our humble beginnings in the office products industry, we have evolved into a forward-thinking company offering innovative products to meet the demand of an ever-changing market.

We strongly believe that our customer is our most valuable asset. Unlike many of our larger competitors, we believe in working for our customers and conforming to meet their needs, not ours. We stand ready to assist in any way possible, supporting our customers through challenges and unique/urgent requirements they may encounter.

PSP
PRODUCTS

571.569.0169 • pspproducts.com