RECTORSEAL

A CSW Industrials Company

PRODUCT DATA SHEET

GUARDIAN DRAIN LOCK®

ROUND FLOOR DRAIN LOCK

Description

Guardian Floor Drain-Lock replaces old, broken, or stolen drain grates with an identical drain cover that features a patented locking system. Fully assembled one-piece design to fit most major 3.5 inch floor drain sizes including Zurn, Smith, and Josam.

Drain Lock is a quality built product designed to withstand the ultimate abuse within restaurants, factories, and other industrial applications. It's simple and affordable to install and use. Made with a glass filled polypropylene base, nickel-bronze strainer top, and a tamper proof pin-n-head stainless steel bolt, this product is best in class.



Applications

For use in commercial floor drains.

Recommended for

Restaurants • Food processing plants
• Factories • Walkways • Construction sites

Features & Benefits

- Tamper proof and unbreakable to prevent the unwanted removable of floor drain strainer
- Easy to install with drop-in and single screw design; requires Tamper Proof Torx Wrench (sold separately)
- Cuts down on solid waste from clogging drains line and causing flooding in common areas
- One-piece assembly to prevent accidental dropping of parts down the drain
- Optional trap seal for Lockout versions to protect drain trap and prevent odors or bugs

Packaging

Code	Description	Qty. per Case	Lbs. per Case	Cubic Ft per Case
Standard Versions				
GDLRFD3500J	4.65" Round Floor Drain - Josam	1	1.14	0.04
GDLRFD3500S	4.7" Round Floor Drain - Smith	1	1.14	0.04
GDLRFD3500Z	5" Round Floor Drain - Zurn	1	1.14	0.04
Lockout Versions				
GDLRLO3500J	4.65" Round Lockout Floor Drain - Josam	1	1.26	0.04
GDLRLO3500S	4.7" Round Lockout Floor Drain - Smith	1	1.26	0.04
GDLRLO3500Z	5" Round Lockout Floor Drain - Zurn	1	1.26	0.04
Tamper Proof Torx Key				
GDLT45	T45 Tamper-Proof Torx Socket	1	0.32	0.001

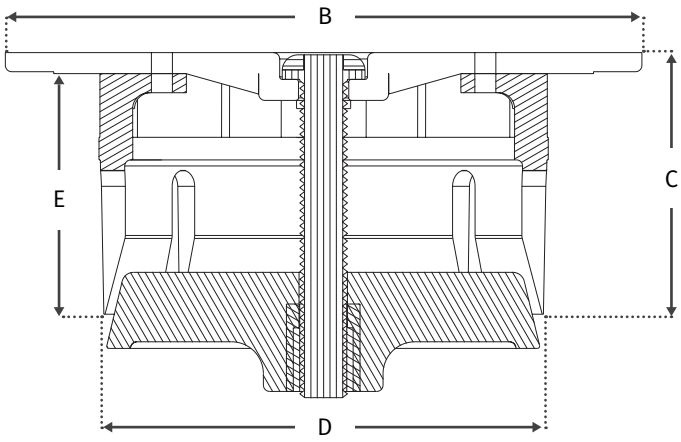

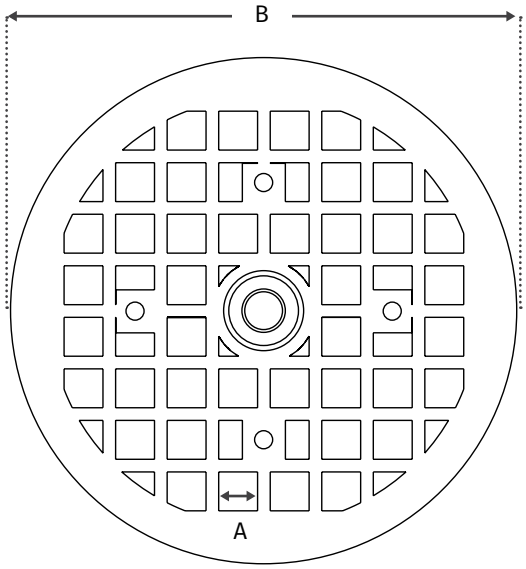

Specifications

Glass filled polypropylene molded body with a nickel-bronze strainer top plate, and stainless tamperproof #45 Torx bolt.

Measurements

Code	Size	A	B	C	D	E
Standard Versions						
GDLRFD3500J	Smith	0.375"	4.70"	2.125"	3.5"	1.875"
GDLRFD3500S	Josam	0.375"	4.65"	2.125"	3.5"	1.875"
GDLRFD3500Z	Zurn	0.375"	5"	2.125"	3.5"	1.875"
Lockout Versions						
GDLRLO3500J	Smith	0.375"	4.70"	2.055"	3.5"	1.89"
GDLRLO3500S	Josam	0.375"	4.65"	2.055"	3.5"	1.89"
GDLRLO3500Z	Zurn	0.375"	5"	2.055"	3.5"	1.89"

Prop 65

WARNING: This product can expose you to chemicals including Lead, which is known to the State of California to cause cancer, birth defects or other reproductive harm.
For more information, go to www.P65Warnings.ca.gov.

3YR LIMITED WARRANTY

For more information on our product warranty, visit RectorSeal.com

Manufactured by

RectorSeal, LLC

2601 Spenwick Drive • Houston, TX 77055, USA • 800-231-3345 • Fax 800-441-0051 • rectorseal.com
3255 Wyandotte St. East • Windsor, ON N8Y 1E9, Canada • 519-966-4901

A CSW Industrials Company. RectorSeal, the logos and other trademarks are property of RectorSeal, LLC, its affiliates or its licensor's and are protected by copyright, trademark and other intellectual property laws, and may not be used without permission. RectorSeal reserves the right to change specifications without prior notice. ©2023 RectorSeal. All rights reserved. R51071-1023