A2L

LGM SERIES

Multi-Position,
Electric Heat
Aluminum Coil
Air Handler

INSTALLATION GUIDE & OPERATION MANUAL

A2L REFRIGERANT MULTI-POSITION AIR HANDLERS

CONTENT

1. Important Safety Instructions
2. Introduction & General Information
3. Inspection
4. General information & Installation Preparation
5. Installation Instructions & Clearances
6. Installation
7. Connecting Refrigerant Lines
8. Metering Devices / Liquid Line Connection
9. Leak Check / Standing Pressure Test / Vacuum Test
10. Electrical Line Voltage Wiring
11. Low Voltage Connections
12. Air Volume Adjustment
13. System Charging
14. A2L Refrigerant Leak Detection Systems
15. Final System Checkout
16. Wiring Diagrams

ASPEN

373 Atascocita Rd.,
Humble, TX 77396
Phone: 800.423.9007
Fax: 281.441.6510
www.aspenmfg.com

1. IMPORTANT SAFETY INSTRUCTION

Potential safety hazards are alerted using the following symbols. The symbol is used in conjunction with terms that indicate the intensity of the hazard. It is the responsibility of the owner and the installer to read and comply with the safety information and the instructions accompanying these symbols.


Read the precautions in this manual carefully before operating the unit.


Read the instructions in this manual carefully before operating the unit.


Read the instructions in this manual carefully before servicing the unit.


Read the instructions in this manual carefully before wiring the unit.


Warning or Caution

⚠ WARNING **This symbol indicates a potentially hazardous situation, which if not avoided, could result in serious injury, serious injury, property damage, product damage or death.**

⚠ CAUTION **This symbol indicates a potentially hazardous situation, which if not avoided, may result in moderate injury or property damage.**

⚠ WARNING **Certified technicians or those individuals meeting the requirements specified by NATE may use this information. Property and product damage or personal injury hazard may occur without such background.**

This appliance is not intended for use by persons (including children) with reduced physical, sensory, or mental capabilities, or lack of experience and knowledge, unless they have been given supervision or instruction concerning use of the appliance by a person responsible for their safety. Children must be supervised to ensure that they do not play with the appliance.

Product designed and manufactured to permit installation in accordance with local and national building codes. It is the installer's responsibility to ensure that the product is installed in strict compliance with the aforementioned codes. Manufacturer assumes no responsibility for damage (personal, product or property) caused due to installations violating regulations.

⚠ WARNING **Disconnect ALL power before servicing or installing this unit. Multiple power sources may be present. Failure to do so may cause property damage, personal injury, or death.**

⚠ WARNING **Unit is not approved for outdoor installations.**

⚠ WARNING **HAZARDOUS VOLTAGE!**
Failure to follow this warning could result in property damage, severe personal injury, or death.

Disconnect ALL electric power, including remote disconnects before servicing. Follow proper lockout/tagout procedures to ensure the power cannot be inadvertently energized.

⚠ WARNING **The unit is designed for operation with 120 V, single phase, 60 Hz power supply. Aspen will not be responsible for damages caused due to modification of the unit to operate with alternative power sources.**

⚠ WARNING **When this unit is installed in an enclosed area, such as a garage or utility room with any Carbon Monoxide producing devices (i.e. automobile, space heater, water heater etc.) ensure that the enclosed area is properly ventilated.**

⚠ WARNING **This product designed and manufactured to permit installation in accordance with local and national building codes. It is the installer's responsibility to ensure that product is installed in strict compliance with national and local codes. Manufacturer takes no responsibility for damage (personal, product or property) caused due to installations violating regulations. Installation of this unit shall be made in accordance with the National Electric Code, NFPA No. 90A and 90B, and any other local codes or utilities requirements.**

⚠ WARNING **Do not bypass safety devices.**

⚠ WARNING **RISK OF FIRE!**
Flammable refrigerant used. To be repaired only by trained service professional. Do not puncture refrigerant tubing. Dispose of properly in accordance with local regulations. Flammable refrigerant used.

⚠ WARNING **PRESSURIZED REFRIGERANT!**
Failure to follow this warning could result in personal injury. System contains oil and refrigerant under high pressure. Recover refrigerant before opening the system. Do not use non-approved refrigerants or refrigerant substitutes or refrigerant additives.

⚠ WARNING **If any hot work is to be conducted on the refrigerating equipment or an associated parts, appropriate fire extinguishing equipment shall be available to hand. Have a dry powder or CO2 fire extinguisher adjacent to the charging area.**

⚠ CAUTION **Only factory authorized kits and accessories should be used when installing or modifying this unit unless it is so noted in these instructions. Some localities may require a licensed installer/service personnel.**

⚠ WARNING **This product can expose you to chemicals including lead, which are known to the State of California to cause cancer and birth defects or other reproductive harm. *For more information go to www.p65Warnings.ca.gov***

⚠ WARNING **Do not use means to accelerate the defrosting process or to clean, other than those recommended by the manufacturer.**

The appliance shall be stored in a room without continuously operating ignition sources (for example: open flames, an operating gas appliance or an operating electric heater).

Do not pierce or burn. Be aware that refrigerants may not contain an odor.

- This appliance shall be installed in accordance with national wiring regulations.
- The of the space necessary for correct installation of the appliance including the minimum permissible distance to adjacent structures is specified in Section 5 of this manual under "INSTALLATION INSTRUCTIONS AND CLEARANCES".
- For air handlers with supplementary heaters, the minimum clearance from the appliance to combustible surfaces is specified in Section 5 of this manual under "INSTALLATION INSTRUCTIONS AND CLEARANCES", the equipment was tested for 0" clearance**.**
- A wiring diagram with clear indication of the connections to external control devices and supply cord can be found in Section 16 of this manual
- The range of external static pressure at which the appliance was tested (add-on heat pumps and ducted appliances with supplementary heaters only) is available in Section 12 of this manual**.**
- The method of connecting the appliance to the electrical supply and interconnection of separate components is detailed in Section 11, LOW VOLTAGE CONNECTIONS and in Section 16, WIRING DIAGRAMS.
- None of the components in this product family are designed or approved to be suitable for outdoor use**.**

This Air Handler unit is a **PARTIAL UNIT AIR CONDITIONER**, complying with **PARTIAL UNIT** requirements of Standard UL 60335-2-40/CSA 22.2 NO. 60335-2-40, and must only be connected to other units that have been confirmed as complying to corresponding **PARTIAL UNIT** requirements of this Standard.

This appliance is not intended for use at altitudes exceeding 2,000 meters.

2. INTRODUCTION & GENERAL INFORMATION

These air handlers are versatile multi-positional unit with the following standard features:

- **APPLICATION VERSATILITY:** This unit is designed for use in upflow, downflow, horizontal left and horizontal right applications. Follow section 5 & 6 for installation and conversion instructions.

Can be AHRI matched with most brands of air conditioners or heat pumps outdoor sections R32 or R454B REFRIGERANT when proper metering device is used.

Product design for use with A2L refrigerant are marked with R32 or R454B refrigerant specified on the nameplate, and the product will be marked with the following symbols:

FIGURE 2.1



Refrigerant Safety Group A2L

Product design for use with A2L refrigerant are equipped with an A2L refrigerant detection system (RDS), which includes A2L Sensor, Mitigation Control Board, and Wiring Harnesses. Refer to Section 14 of this manual wiring and operation instructions.

- **MOTOR:** Constant torque ECM speeds and torques are controlled by software embedded in the motor to maintain constant torque. Motors are pre-programmed at the factory.
- **CABINET:** Sturdy, short, galvanized steel cabinet with painted front panels. Cabinet fully insulated with 1/2" faced insulation to prevent sweating, to encapsulate glass fibers, and to provide excellent R-value. Stick pins ensure insulation remains in place. Units ship with disposable filter in filter rack.

  Electrical connections can be made from the top or left. Disconnect does not protrude through the wall panel. Fan time delay relay standard for increased efficiency.
- **BLOWER:** Direct drive multi-speed blowers circulate air quietly and efficiently. Motor speeds can be easily selected via motor terminals. Swing mounted blowers can be easily removed for service. Coil mounted Schrader allows pre-installation pressure testing.
- **ELECTRONIC CIRCUIT BOARD:** Electronic circuit board provides 30 sec. ON/OFF blower time delay extracting more heat/cool from the coil.
- **DX Coil:** High-efficiency rifled copper tubes and enhanced aluminum fins provide maximum heat transfer. All coils are immersion tested at 500 psi, followed by nitrogen pressurization and factory sealing to ensure optimal system integrity and long-term reliability. Liquid-line Schrader allows pre-installation pressure assurance testing.

  Available with either check style flowrator or TXV metering device. Field-installable TXVs are also available.

  Rugged GLP drain pan holds minimal condensate while eliminating the possibility of corrosion. Drain pans are UV safe. GLP drain pans with bottom primary and secondary drain connections or alternate right-side primary. All connections 3/4" FPT. Access door allows for coil cleaning.
- **WARRANTY:** Ten-year limited parts warranty.

3. INSPECTION

On receiving the product, visually inspect it for any major shipping related damages. Shipping damages are the carrier's responsibility. Inspect the product labels to verify the model number and options are in accordance with your order. Manufacturer will not accept damage claims for incorrectly shipped product.

4. GENERAL INFO. AND INSTALLATION PREPARATION

Read all the instructions in this guideline carefully while paying special attention to the WARNING and CAUTION alerts. If any of the instructions are unclear; clarify with certified technicians. Gather all the tools needed for successful installation of the unit prior to beginning the installation.

Information for Installation, Service, Maintenance & Repair Instructions.

Products designed for use with A2L / Flammable Refrigerants are equipped with a refrigerant leak detection system (which includes an A2L Sensor, a Mitigation Control Board, and Harnesses) which must be wired to the furnace as specified in the Wiring Diagram.

The A2L Sensor must be installed and powered for service.

⚠ WARNING **Disconnect ALL power before servicing or installing this unit. Multiple power sources may be present. Failure to do so may cause property damage, personal injury, or death.**

⚠ WARNING **When using FLAMMABLE REFRIGERANTS, LEAK DETECTION SYSTEM installed. Unit must be powered except for service.**

For mechanical ventilation, the lower edge of the air extraction opening where air is exhausted from the room shall not be more than 100 mm above the floor. The location where the mechanical ventilation air extracted from the space is discharged shall be separated by a sufficient distance, but not less than 3 m, from the mechanical ventilation air intake openings, to prevent recirculation to the space.

⚠ WARNING **Refrigerating pipe or components are installed in a position where they are unlikely to be exposed to any substance which may corrode refrigerant containing components, unless the components are constructed of materials which are inherently resistant to being corroded or are suitably protected against being so corroded.**

False ceilings or drop ceilings may be used as a return air plenum only if a refrigerant detection system is provided in the appliance and any external connections are also provided with a sensor immediately below the return air plenum duct joint.

⚠ WARNING **RISK OF FIRE! Auxiliary devices which may be a POTENTIAL IGNITION SOURCE shall not be installed in the duct work. Examples of such POTENTIAL IGNITION SOURCES are hot surfaces with a temperature exceeding 700°C and electric switching devices.**

⚠ WARNING **Only auxiliary devices approved by the appliance manufacturer or declared suitable with the refrigerant shall be installed in connecting ductwork.**

4.1. QUALIFICATION OF WORKERS

Only technicians with training carried out by national training organizations or manufacturers that are accredited to teach the relevant national competency standards that may be set in legislation may work on this equipment. The achieved competence must be documented by a certificate.

4.2. CHECKS TO THE WORK AREA AND WORK PROCEDURE

Prior to work taking place, the area around the equipment is to be surveyed to make sure that there are no flammable hazards or ignition risks.

Work shall be undertaken under a controlled procedure so as to minimize the risk of a flammable gas or vapor being present while the work is being performed.

All maintenance staff and others working in the local area shall be instructed on the nature of work being carried out. Work in confined spaces shall be avoided.

4.3. CHECKING FOR PRESENCE OF REFRIGERANT

The area shall be checked with an appropriate refrigerant detector prior to and during work, to ensure the technician is aware of potentially toxic or flammable atmospheres.

Ensure that the leak detection equipment being used is suitable for use with all applicable refrigerants, i.e. non-sparking, adequately sealed or intrinsically safe.

4.4. PRESENCE OF FIRE EXTINGUISHER

If any hot work is to be conducted on the refrigerating equipment or any associated parts, appropriate fire extinguishing equipment shall be available to hand. Have a dry powder or CO2 fire extinguisher adjacent to the charging area.

4.5. NO IGNITION SOURCES

No person carrying out work in relation to a REFRIGERATING SYSTEM which involves exposing any pipe work shall use any sources of ignition in such a manner that it may lead to the risk of fire or explosion. All possible ignition sources, including cigarette smoking, should be kept sufficiently far away from the site of installation, repairing, removing and disposal, during which refrigerant can possibly be released to the surrounding space. Prior to work taking place, the area around the equipment is to be surveyed to make sure that there are no flammable hazards or ignition risks. "NO SMOKING" signs shall be displayed.

4.6. VENTILATED AREA

Ensure that the area is in the open or that it is adequately ventilated before breaking into the system or conducting any hot work. A degree of ventilation shall continue during the period that the work is carried out. The ventilation should safely disperse any released refrigerant and preferably expel it externally into the atmosphere.

4.7. CHECKS TO REFRIGERATING EQUIPMENT

Where electrical components are being changed, they shall be fit for the purpose and to the correct specification. At all times the manufacturer's maintenance and service guidelines shall be followed. If in doubt, consult the manufacturer's technical department for assistance.

The following checks shall be applied to installations using FLAMMABLE REFRIGERANTS:

- The actual REFRIGERANT CHARGE is in accordance with the room size within which the refrigerant containing parts are installed;
- The ventilation machinery and outlets are operating adequately and are not obstructed;
- Marking to the equipment continues to be visible and legible. Markings and signs that are illegible shall be corrected;
- Refrigerating pipe or components are installed in a position where they are unlikely to be exposed to any substance which may corrode refrigerant containing components, unless the components are constructed of materials which are inherently resistant to being corroded or are suitably protected against being so corroded.

4.8. CHECKS TO ELECTRICAL DEVICES

Repair and maintenance to electrical components shall include initial safety checks and component inspection procedures. If a fault exists that could compromise safety, then no electrical supply shall be connected to the circuit until it is satisfactorily dealt with. If the fault cannot be corrected immediately but it is necessary to continue operation, an adequate temporary solution shall be used. This shall be reported to the owner of the equipment so all parties are advised.

Initial Safety Checks shall include:

- That capacitors are discharged: this shall be done in a safe manner to avoid possibility of sparking;
- That no live electrical components and wiring are exposed while charging, recovering or purging the system;
- That there is continuity of earth bonding.

4.9. REPAIRS TO SEALED ELECTRICAL COMPONENTS

During repairs to sealed electrical components, all electrical supplies shall be disconnected from the equipment being worked upon prior to any removal of sealed covers, etc. If it is absolutely necessary to have an electrical supply to equipment during servicing, then a permanently operating form of leak detection shall be located at the most critical point to warn of a potentially hazardous situation.

Particular attention shall be paid to the following to ensure that by working on electrical components, the casing is not altered in such a way that the level of protection is affected. This shall include damage to cables, excessive number of connections, terminals not made to original specification, damage to seals, incorrect fitting of glands, etc.

Ensure that the apparatus is mounted securely.

Ensure that seals or sealing materials have not degraded to the point that they no longer serve the purpose of preventing the ingress of flammable atmospheres. Replacement parts shall be in accordance with the manufacturer's specifications.

4.10. CABLING

Check that cabling will not be subject to wear, corrosion, excessive pressure, vibration, sharp edges or any other adverse environmental effects. The check shall also take into account the effects of aging or continual vibration from sources such as compressors or fans.

4.11. DETECTION OF FLAMMABLE REFRIGERANTS

Under no circumstances shall potential sources of ignition be used in the searching for or detection of refrigerant leaks. A halide torch (or any other detector using a naked flame) shall not be used.

Electronic leak detectors may be used to detect refrigerant leaks but, in the case of FLAMMABLE REFRIGERANTS, the sensitivity may not be adequate, or may need re-calibration. (Detection equipment shall be calibrated in a refrigerant-free area.) Ensure that the detector is not a potential source of ignition and is suitable for the refrigerant used. Leak detection equipment shall be set at a percentage of the LFL of the refrigerant and shall be calibrated to the refrigerant employed, and the appropriate percentage of gas (15 % maximum) is confirmed.

Leak detection fluids such as the bubble method is also suitable for use with most refrigerants but the use of detergents containing chlorine shall be avoided as the chlorine may react with the refrigerant and corrode the copper pipe-work. If a leak is suspected, all naked flames shall be removed/extinguished. If a leakage of refrigerant is found which requires brazing, all of the refrigerant shall be recovered from the system, or isolated (by means of shut off valves) in a part of the system remote from the leak.

4.12. REMOVAL AND EVACUATION

When breaking into the refrigerant circuit to make repairs – or for any other purpose – conventional procedures shall be used. However, for FLAMMABLE REFRIGERANTS it is important that best practice is followed since flammability is a consideration. *The following procedure shall be adhered to:*

– safely remove refrigerant following local and national regulations;

– evacuate;

– purge the circuit with inert gas (optional for A2L);

– evacuate (optional for A2L);

– continuously flush or purge with inert gas when using flame to open circuit; and

– open the circuit.

The refrigerant charge shall be recovered into the correct recovery cylinders if venting is not allowed by local and national codes. For appliances containing flammable refrigerants, the system shall be purged with oxygen-free nitrogen to render the appliance safe for flammable refrigerants. This process might need to be repeated several times. Compressed air or oxygen shall not be used for purging refrigerant systems.

For appliances containing flammable refrigerants, refrigerant purging shall be achieved by breaking the vacuum in the system with oxygen-free nitrogen and continuing until the working pressure is achieved, then venting to the atmosphere, and finally pulling down to a vacuum (optional for A2L). This process shall be repeated until no refrigerant is within the system (optional for A2L). When the final oxygen-free nitrogen charge is used, the system shall be vented down to atmospheric pressure to enable work to take place.

The outlet for the vacuum pump shall not be close to any potential ignition sources, and ventilation shall be available.

4.13. CHARGING PROCEDURES

In addition to conventional charging procedures, the following requirements shall be followed.

– Ensure that contamination of different refrigerants does not occur when using charging equipment.

– Hoses or lines shall be as short as possible to minimize the amount of refrigerant contained in them.

– Cylinders shall be kept in an appropriate position according to the instructions.

– Ensure that the REFRIGERATING SYSTEM is earthed prior to charging the system with refrigerant.

– Label the system when charging is complete (if not already).

– Extreme care shall be taken not to overfill the REFRIGERATING SYSTEM.

Prior to recharging the system, it shall be pressure-tested with the appropriate purging gas. The system shall be leak-tested on completion of charging but prior to commissioning. A follow up leak test shall be carried out prior to leaving the site.

4.14. DECOMMISSIONING

Before carrying out this procedure, it is essential that the technician is completely familiar with the equipment and all its detail. It is recommended good practice that all refrigerants are recovered safely. Prior to the task being carried out, an oil and refrigerant sample shall be taken in case analysis is required prior to re-use of recovered refrigerant. It is essential that electrical power is available before the task is commenced.

a) Become familiar with the equipment and its operation.

b) Isolate system electrically.

c) Before attempting the procedure, ensure that:

- mechanical handling equipment is available, if required, for handling refrigerant cylinders;
- all personal protective equipment is available and being used correctly;
- the recovery process is supervised at all times by a competent person;
- recovery equipment and cylinders conform to the appropriate standards.

d) Pump down refrigerant system, if possible.

e) If a vacuum is not possible, make a manifold so that refrigerant can be removed from various parts of the system.

f) Make sure that cylinder is situated on the scales before recovery takes place.

g) Start the recovery machine and operate in accordance with instructions.

h) Do not overfill cylinders (no more than 80 % volume liquid charge).

i) Do not exceed the maximum working pressure of the cylinder, even temporarily.

j) When the cylinders have been filled correctly and the process completed, make sure that the cylinders and the equipment are removed from site promptly and all isolation valves on the equipment are closed off.

k) Recovered refrigerant shall not be charged into another REFRIGERATING SYSTEM unless it has been cleaned and checked.

4.15. LABELING

Equipment shall be labeled stating that it has been decommissioned and emptied of refrigerant. The label shall be dated and signed. For appliances containing FLAMMABLE REFRIGERANTS, ensure that there are labels on the equipment stating that the equipment contains FLAMMABLE REFRIGERANT.

4.16. RECOVERY

When removing refrigerant from a system, either for servicing or decommissioning, it is recommended good practice that all refrigerants are removed safely.

When transferring refrigerant into cylinders, ensure that only appropriate refrigerant recovery cylinders are employed. Ensure that the correct number of cylinders for holding the total system charge is available. All cylinders to be used are designated for the recovered refrigerant and labeled for that refrigerant (i.e. special cylinders for the recovery of refrigerant). Cylinders shall be complete with pressure-relief valve and associated shut-off valves in good working order. Empty recovery cylinders are evacuated and, if possible, cooled before recovery occurs.

The recovery equipment shall be in good working order with a set of instructions concerning the equipment that is at hand and shall be suitable for the recovery of the flammable refrigerant. If in doubt, the manufacturer should be consulted. In addition, a set of calibrated weighing scales shall be available and in good working order. Hoses shall be complete with leak- free disconnect couplings and in good condition.

The recovered refrigerant shall be processed according to local legislation in the correct recovery cylinder, and the relevant waste transfer note arranged. Do not mix refrigerants in recovery units and especially not in cylinders.

If compressors or compressor oils are to be removed, ensure that they have been evacuated to an acceptable level to make certain that flammable refrigerant does not remain within the lubricant. The compressor body shall not be heated by an open flame or other ignition sources to accelerate this process. When oil is drained from a system, it shall be carried out safely.

5. INSTALLATION INSTRUCTIONS AND CLEARANCES

This unit is designed for zero clearance installation on three sides and adequate clearance to provide access for service in the front. A minimum of 2.5 – 3.5 feet clearance is recommended on the front end (Fig 5.1).

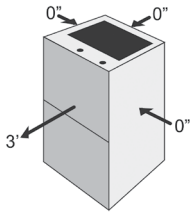

FIGURE 5.1
INSTALLATION CLEARANCE

5.1. INSTALLATION OPTIONS

If the unit is to be installed in garages, warehouses or other areas where they may be subjected to physical damage, adequate protective barriers must be installed. Unit must be installed 18" away from source of ignition.

If the unit is located in high humidity areas like attics or unconditioned garage; the air handler casing might experience nuisance sweating. In such installation scenarios, wrapping the casing with a 2" fiberglass insulation with vapor barrier should be used.

5.2. CONDENSATE DRAIN PREPARATION

5.2.1. CONDENSATE DRAIN

- Condensate drain is located at front as shown in picture with primary and secondary drain port.
- Pipe condensate system using proper PVC fittings.
- Ensure a minimum 2" trap is installed in the condensate drain. Locate the trap near to the connection opening on the air handler. See illustration.



FIGURE 5.2
CONDENSATE DRAIN TRAP

An auxiliary drain pan must be provided by the installer and placed under the entire unit with a separate drain line that is properly sloped and terminated in an area visible to the homeowner. The auxiliary pans provide extra protection to the area under the unit should the primary and secondary drain plug up and overflow. As expressed in our product warranty; **ASPEN WILL NOT BE BILLED FOR ANY STRUCTURAL DAMAGES CAUSE BY FAILURE TO FOLLOW THIS INSTALLATION REQUIREMENT.** The drains from the auxiliary drain pan must be installed according to the local building codes.

⚠ CAUTION **Drain lines from the auxiliary drain pan should NOT be connected to the primary drain line of the coil.**

The drain lines must be installed with 1/4" per foot pitch to provide free drainage. A condensate trap MUST be installed on the primary drain line to ensure proper drainage of the condensate. The trap must be installed in the drain line below the bottom of the drain pan (Fig. 5.2b)

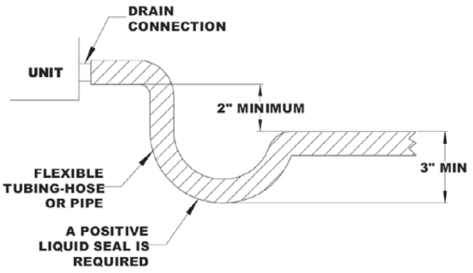

FIGURE 5.2B - CONDENSATE DRAIN TRAP

⚠ CAUTION **Since coil is upstream of the blower, all drains MUST be trapped or sealed. Failure to do so will result in condensate overflow from the drain pan. Aspen will NOT be responsible for any damages resulting from failure to follow these instructions.**

⚠ CAUTION **If the drain pan is constructed of nylon or plastic; use Teflon tape to connect the drain lines to the threads in the drain pan. DO NOT USE SOLVENT BASED PIPE DOPE. THIS WILL REDUCE THE LIFE OF THE PAN.**

The drain pan has primary and secondary drain connections. If a secondary drain line is required, it should be run separately from the primary and should terminate in a highly visible location.

Condensate disposal through the secondary drain line indicates that the primary drain line is plugged and needs cleaning. If a secondary drain line will not be provided, plug the secondary drain. Drain plugs are ***NOT*** to be reused without plumbers' tape or putty. Drain line connection should be finger tightened, then turned no more than one complete turn as needed to ensure a firm connection. ***DO NOT*** over-tighten connection or damage may occur.

5.3. DUCTWORK

Duct systems should be installed in accordance with standards for air-conditioning systems, National Fire Protection Association Pamphlet No. 90A or 90B. They should be sized in accordance with National Environmental System Contractors Association Manual K, or whichever is applicable.



FIGURE 5.3

On any job, non-flammable flexible collars should be used for the return air and discharge connections to prevent transmission of vibration. Although these units have been specially designed for quiet vibration-free operation, air ducts can act as soundboards, can, if poorly installed, amplify the slightest vibration to the annoyance level.

All main supply and return air drops should be properly sized as determined by the designer of the duct system and should not necessarily be the size of the duct flange openings of the unit. (The duct size should never be smaller than the flange openings of the air handler supply and return air openings.)

FIGURE 5.4

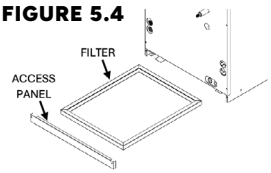

Filter sizes vary for each model (see spec sheet) that needs to be installed in the filter rack that is provided (Fig 5.4). Inspect and clean or replace filter every month. A blocked filter reduce airflow to the coil and hinder the performance of the system.

It is recommended that wherever supply and return air sheet metal duct pass through unconditioned areas, they be insulated to prevent excessive heat loss during heating operation. When applied in conjunction with summer air conditioning, sheet metal duct routed through unconditioned areas should be insulated and have an outside vapor barrier to prevent formation of condensation.

6. INSTALLATION

⚠ CAUTION **Ensure that the unit is adequately sized. The tonnage of the outdoor unit should never exceed the tonnage of this unit.**

⚠ WARNING **The coil was manufactured with a dry nitrogen pre-charge. Release the pressure through the Schrader valve test port prior to installation. If holding pressure is not present, return coil to distributor for exchange.**

⚠ CAUTION **Some Aspen coils may include a Schrader valve on the suction manifold. Ensure that the Schrader valve and valve core (where present) are protected from heat during brazing and installation to prevent leakage. Use a core removal tool to temporarily remove the core when brazing. Replace the core once brazing is completed.**

⚠ CAUTION **Insulation on the suction line MUST extend into the cabinet and continue as far as possible to eliminate condensate dripping onto the access door.**

- ✓ Clean coil fins with degreasing agent or mild detergent and rinse fins clean prior to installation.
- ✓ The refrigerant line sizes should be selected according to the recommendations of the outdoor unit manufacturer.
- ✓ Care must be taken to ensure all connection joints are burr-free and clean. Failure to do so may increase chances of a leak. It is recommended to use a pipe cutter to remove the spun closed end of the suction line.
- ✓ To reduce air leakage, rubber grommets may be present where the lines pass through the coil case. To avoid damage, remove grommets prior to brazing by sliding over the lines. Use a quenching cloth or allow the lines to cool before reinstalling the grommets.
- ✓ Use of wet rags/quenching cloth is highly recommended to prevent weld-related damages to the casing and Schrader valve (if present)

6.1. AIR HANDLER ORIENTATION

This unit can be installed in upflow, counterflow, horizontal right and horizontal left discharge. See Fig. 6.1-A

When installing in an upflow or counterflow discharge it is recommended to remove the horizontal drain pan that comes with the unit. See Fig 6.1-B

FIGURE 6.1A

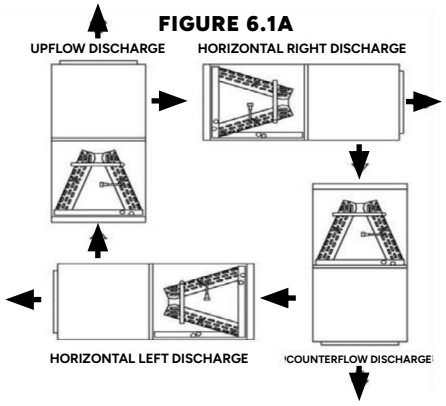

FIGURE 6.1B

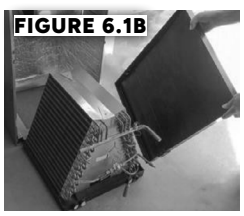

6.1.1. HORIZONTAL LEFT-HAND DISCHARGE CONVERSION

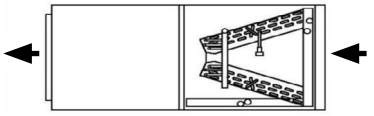

FIGURE 6.1.1

HORIZONTAL LEFT DISCHARGE

1. Remove all access panels.	
2. Pull out the coil and remove the horizontal drain pan.	
3. Install the horizontal drain pan that was pull out to the left-hand side of the coil.	
4. Re-install the coil back to the cabinet and mount the access panels back into the unit.	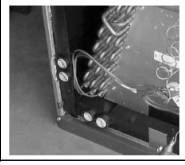

6.1.2. COUNTERFLOW OR DOWNFLOW CONVERSION

1. Unscrew and open the access panels – upper (1), lower (2) and filter cover (3). Pull-out the filter (4), coil assembly (5) and discard horizontal pan (6) then unscrew the coil deck (7) and filter rail (8) on both sides of the cabinet before pulling out. as shown in figure below.

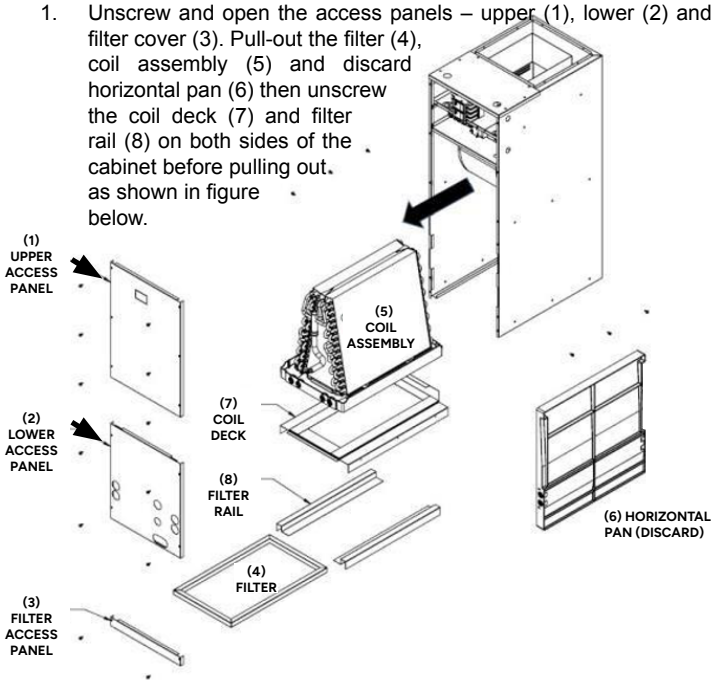

2. Rotate the unit 180° as shown in the figure.

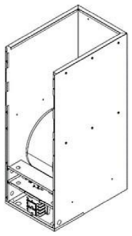

3. Re-install the coil deck (7), filter rail (8) and filter (4) as shown in figure on the next page.

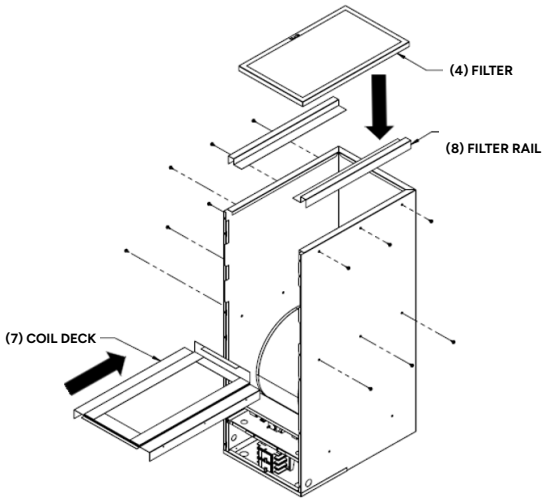

4. Add Block Off Plate (9) on coil assembly (5).

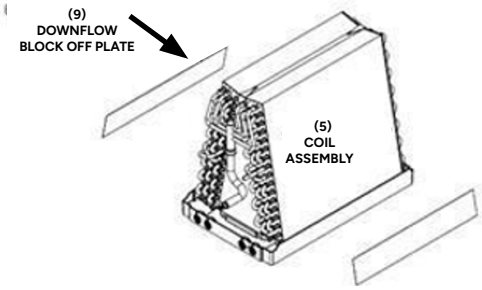

5. Slide the coil assembly (5) back into the cabinet then finally re-install and fasten all the access panels – filter cover (3), lower (2), and upper (1) as shown in figure below.

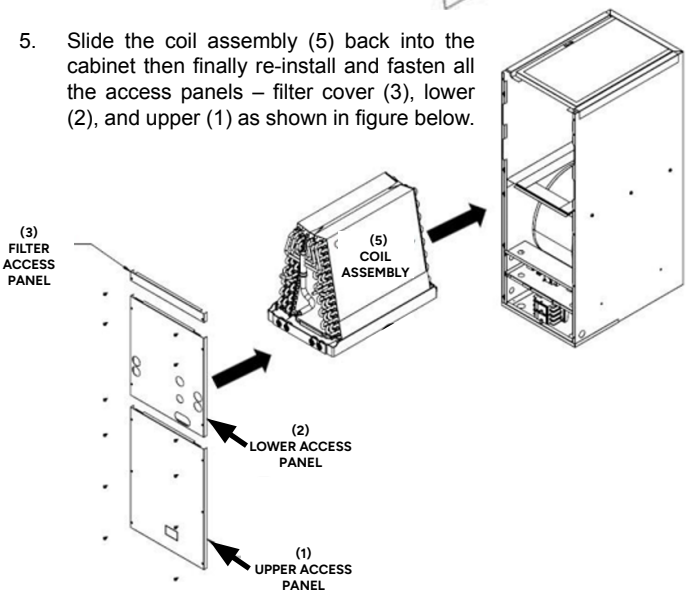

6.2. CONNECTING DUCTING

6.2.1. Secure supply air ducting to the top of the air handler. Canvas connectors are recommended for reducing potential noise transmission.

7. CONNECTING REFRIGERANT LINES

⚠ WARNING **The coil is manufactured with dry nitrogen pre-charge. Release the pressure through the Schrader valve test port prior to installation. If holding pressure is not present, return coil to distributor for exchange.**

⚠ NOTICE **Refrigerant tubing must be routed to allow accessibility for service and maintenance of the unit.**

Pipe-work including piping material, pipe routing, and installation shall include protection from physical damage in operation and service, and be in compliance with national and local codes and standards, such as ASHRAE 15, ASHRAE 15.2, IAPMO Uniform Mechanical Code, ICC International Mechanical Code, or CSA B52. All field joints shall be accessible for inspection prior to being covered or enclosed.

⚠ WARNING **For coils using A2L FLAMMABLE REFRIGERANTS, when installed in a room with an area less than that outlined in Table 15.1 for R32 and Table 15.2 for R454B. That room shall be without continuously operating open flames (for Example an operating gas appliance) or other potential ignition sources (for example an operating electric heater, hot surfaces). A flame providing device that may be installed in the same space if the device is provided with an effective flame arrest.**

After completion of field piping for split systems, the field pipework shall be pressure tested with an inert gas and then vacuum tested prior to refrigerant charging, according to the following requirements:

The minimum test pressure for the low side of the system shall be the low side design pressure and the minimum test pressure for the high side of the system shall be the high side design pressure, unless the high side of the system, cannot be isolated from the low side of the system in which case the entire system shall be pressure tested to the low side design pressure.

Field-made refrigerant joints indoors shall be tightness tested. The test method shall have a sensitivity of 5 grams per year of refrigerant or better under a pressure of at least 0.25 times the maximum allowable pressure. No leak shall be detected. **REFER TO SECTION 13 FOR SYSTEM CHARGING INSTRUCTIONS.**

Clean coil fins with degreasing agent or mild detergent and rinse fins clean prior to installation. **REFER TO SECTION 10 OF THIS MANUAL FOR COIL CLEANING / MAINTENANCE GUIDANCE.**

The refrigerant line sizes should be selected according to the recommendations of the outdoor unit manufacturer.

Care must be taken to ensure all connection joints are burr-free and clean. Failure to do so may increase chances of a leak. It is recommended to use a pipe cutter to remove the spun closed end of the suction line.

To reduce air leakage, rubber grommets may be present where the lines pass through the coil case. To avoid damage, remove grommets prior to brazing by sliding over the lines. Use a quenching cloth or allow the lines to cool before reinstalling the grommets.

Use of wet rags/quenching cloth is highly recommended to prevent weld-related damage to the casing and Schrader valve (if present).

⚠ WARNING **The coils may include a Schrader valve on the suction manifold. Ensure that the Schrader valve and valve core (where present) are protected from heat to prevent leakage.**

7.1. Release nitrogen holding charge by depressing the Shrader Valve at the liquid line connection on the air handler. If no gas releases from the air handler, contact distributor regarding potential leak.


FIGURE 7.1

7.2. Cut off Shrader Valve fitting at the liquid line connection. Use a tubing cutter for this step. Clean the burr from the cut tubing to reduce the chance of future leaks. Connect the liquid line to the tubing at the indoor unit.


FIGURE 7.2

7.3. Use tubing cutter to remove the spun end from the suction line connection at the air handler. Clean the burr from the cut tubing to reduce the chance of future leaks.


FIGURE 7.3

7.4. To avoid heat damage to grommets where present, remove these prior to brazing by sliding them over the refrigerant lines and out of the way.

7.5. Check to determine if the evaporator coil has a Schrader fitting on the suction manifold. If yes, remove the valve core to prevent heat damage during brazing. Replace the valve core once the piping has cooled.

7.6. If the air handler has a TXV metering device, remove the sensing bulb from the suction line prior to brazing to prevent heat damage from occurring. Replace the sensing bulb once the piping has cooled.


FIGURE 7.4A


FIGURE 7.4B

7.7. Flow nitrogen through the piping when brazing.

7.8. Braze both refrigerant line connections using proper brazing procedures.

7.9. When all line connections are brazed, perform a proper system evacuation procedure per the outdoor unit manufacturer instructions.


FIGURE 7.10

7.10. Seal the penetration openings where the line-set piping enters the air handler cabinet.

8. METERING DEVICES/LIQUID LINE CONNECTION

Aspen coils are available with two types of expansion / metering devices: a) flowrator / fixed orifice piston, or b) TXV. The following instructions are separated into sections by metering device.

Aspen's A2L air handlers can be factory configured or field-configured for R454B, or R-32 with the appropriate metering device (piston/fixed orifice or TXV) and can be equipped with factory or field installed Refrigerant Detection System Kit.

Field-configurable A2L coils will ship with a factory installed piston. For field-configuration:

- First confirm if the outdoor unit is factory charged with R454B or R32 refrigerant.
- Next, select the appropriate expansion device for the refrigerant used in the application and AHRI rating (if applicable).
  - » If installing a fixed orifice piston as the metering device, use the piston supplied by the outdoor unit's manufacturer with the outdoor unit. If a piston is not supplied with the outdoor unit, review the metering devices in Table 8.1 to ensure that the correct piston / fixed orifice size is installed. ***Follow installation instructions in Section 8.1.***
  - » If installing a TXV as the metering device, review the metering devices in Table 8.1 to ensure that the correct TXV is installed. ***Follow installation instructions in Section 8.2.***

FIGURE 8A

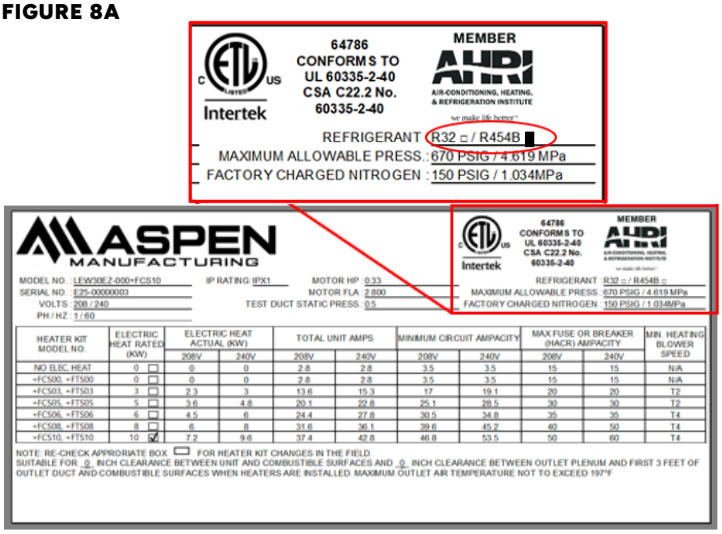

TABLE 8.1 - METERING DEVICES WITHOUT PISTON SUPPLIED

TON.	R32 ORIF.		R32 TXV		R454B ORIF.		R454B TXV	
	SIZE	PART #	TXV KIT	PART #	SIZE	PART #	TXV KIT	PART #
1.5	0.042	4105	X32S	70014	0.045	4033	X454S	70011
2.0	0.049	4006			0.052	4007		
2.5	0.053	3978			0.059	4000		
3.0	0.057	3984			0.065	3980		
3.5	0.063	3973	X32L	70015	0.070	3993	X454L	70012
4.0	0.065	3980			0.076	3989		
5.0	0.074	4001			0.077	3995		

8.1 FLOWRATOR / PISTON OR FIXED ORIFICE

FIGURE 8.1
FLOWRATOR ASSEMBLY COMPONENTS

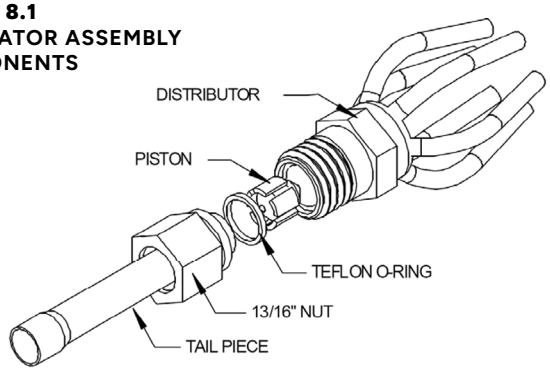

⚠ CAUTION **Use Piston sizes recommended by the outdoor unit manufacturer whenever possible. The piston should be sized according to the capacity of the outdoor unit.**

⚠ WARNING **Failure to install the proper piston can lead to poor system performance and possible compressor damage.**

8.1.1. INSTALLATION OF PISTON / FIXED ORIFICE

NOTE: Photos are for basic illustration / reference purposes only. Actual equipment configuration may differ from that shown.


FIGURE 8.2

I-1. Disassemble the flowrator body using two wrenches. Unscrew the body with a counterclockwise motion.

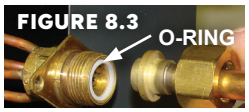

FIGURE 8.3

I-2. Replace the Teflon O-ring (located between the halves). Discard Schrader if present.

⚠ CAUTION **Be aware of the Teflon O-ring. Be sure to replace the O-ring to attain a proper seal. (The Teflon O-ring is located between the two halves of the flowrator).**

I-3. Slide the attachment nut onto the liquid line stub out.
I-4. Braze the stub-out portion to the liquid line and let cool.

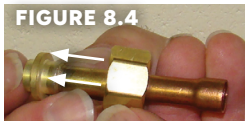
FIGURE 8.4

I-5. Taking care that the white Teflon seal is still in place inside the flowrator body, firmly seat the stub and screw the attachment nut to flowrator body.

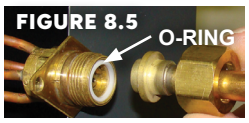

FIGURE 8.5

I-6. Tighten nut using no more than 10 ft-lbs of torque. A flare nut open end wrench is recommended to evenly distribute the force across all six sides of the nut to ensure piston body is not deformed.

8.1.2. PISTON REPLACEMENT

NOTE: Photos are for basic illustration / reference purposes only. Actual equipment configuration may differ from that shown.


FIGURE 8.6

During some installations, a piston change may be required. If so, the installer MUST change the piston. Use piston sizes recommended by the outdoor unit manufacturer. If a sizing chart is not available, use the piston size chart provided below to size the required piston. The size of the piston is stamped on the piston body (Fig 8.6).

Use the chart below when matching coil with an outdoor unit with a different nominal capacity than the coil.

II-1. Evacuate the system as per manufacturer guidelines and recommendations.

II-2. Turn the 13/16" nut once to release any residual pressure in the coil.

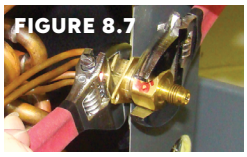

II-3. After ensuring that the coil is free of any residual pressure, disassemble the flowrator body completely using two wrenches. Take great care not to distort the feeder tubes. The wrench used to clasp the nut should be turned in counterclockwise direction to unscrew the nut.



II-4. Slide the 13/16" nut over the line-set and separate the two halves of the flowrator.



II-5. Pull the piston out using a small wire or pick. Verify the piston size (size is typically stamped on the body of the piston - Fig 8.6). If a different piston size is required by the outdoor unit manufacturer, re place the piston using the small wire provided with the piston kit.



II-6. Replace the piston with one of the correct size. Do not force the new piston into the body. Make sure the piston moves freely in body.

⚠ CAUTION **Pay close attention to the piston orientation. The pointed end of the piston MUST go into the distributor body, towards the coil. Failure to ensure this orientation will cause the piston to be bypassed during operation which might damage the outdoor unit.**

II-7. Assemble the two halves correctly and ensure that the Teflon O-ring is present between the two halves (See I-5). Slide the 13/16" nut onto the distributor body.

⚠ CAUTION **Be aware of the Teflon O-ring. Be sure to replace the O-ring to attain a proper seal. (The Teflon O-ring is located between the two halves of the flowrator).**

II-8. Tighten the nut to a torque of approximately 10 ft-lbs. ***Do NOT over-tighten the nut.*** Over-tightening could crack the nut and/or impede the piston movement during operation.

II-9. If present, slide the rubber grommet back to position to prevent air leakage.

8.2 TXV COILS

⚠ WARNING **The sensing bulb and TXV body MUST be protected from overheating during brazing. The sensing bulb and TXV body must be covered using a quench cloth or wet cloth when brazing. Pointing the brazing flame away from the valve and sensing bulb provide partial protection only.**

FIGURE 8.11
COMPONENTS OF A TYPICAL TXV ASSEMBLY

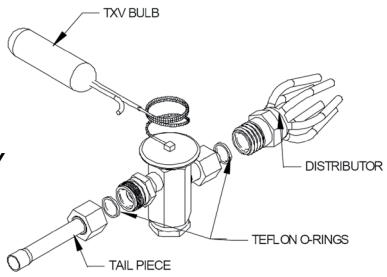

⚠ WARNING **Ensure that the TXV selected is compatible with the refrigerant used in the outdoor system. The TXV body is marked with R454B, or R32.**

⚠ WARNING **The valves should be sized according to the capacity of the outdoor unit. Failure to install the right valve can lead to poor performance and possible compressor damage.**

I. TXV BULB HORIZONTAL MOUNTING

The orientation and location of the TXV bulb has a major influence on the system performance.

⚠ WARNING **Ensure that the TXV bulb is in direct contact with the suction/vapor line. Gap between the bulb and tube should be avoided. Failure to do so will impair the proper functioning of the TXV valve.**

It is recommended that the TXV bulb be installed parallel to the ground (on a horizontal plane). The bulb position should be at 2 o'clock or 10 o'clock. Fig. 8.12 shows the recommended position for the TXV bulb installation in the horizontal plane.

FIGURE 8.12
RECOMMENDED LOCATION FOR HORIZONTAL TXV BULB MOUNT

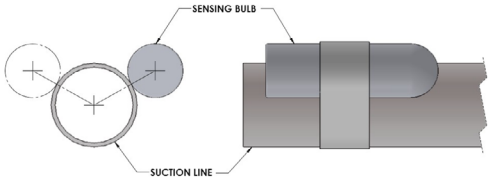

BULB POSITION AT 2 O'CLOCK OR 10 O'CLOCK

The TXV sensing bulb SHOULD be mounted on the suction line approximately 6" from the TXV or coil housing using the metal clamp provided. In order to obtain a good temperature reading and correct superheat control, the TXV sensing bulb must conform to ALL of the following criteria:

1. The sensing bulb MUST be in direct and continuous contact with the suction line.
2. The sensing bulb should be mounted horizontally on the suction line.
3. The sensing bulb MUST be mounted at the 2 o'clock or 10 o'clock position on the circumference of the suction line.
4. The sensing bulb MUST be insulated from outside air.

A properly mounted sensing bulb will prevent false readings caused by liquid refrigerant that may have formed inside the suction/vapor line. Insulation will protect the sensing bulb from false readings due to contact with warm air.

II. TXV BULB VERTICAL MOUNTING

FIGURE 8.13
RECOMMENDED LOCATION FOR VERTICAL TXV BULB MOUNT

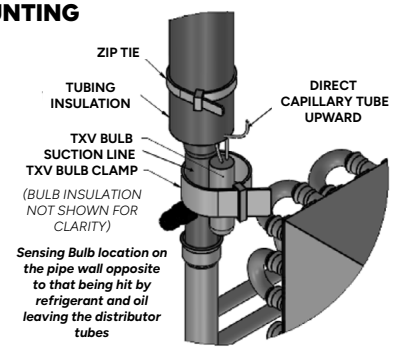

As recommended in Section 8.1, the TXV sensing bulb should be mounted in a horizontal plane in relation to the suction/vapor line. However, some installation configurations may require that the sensing bulb be mounted vertically. In this instance, place the bulb opposite the piping wall being hit by refrigerant and oil leaving the distributor tubes, and with capillary tubes directed upwards as shown in Fig. 8.13.

⚠ CAUTION **If the TXV sensing bulb is mounted vertically; the capillary MUST be directed upwards. The bulb must be mounted on the wall opposite to that being directly hit by the refrigerant and oil leaving the distributor tubes.**

III. FIELD-INSTALLED TXV RETROFIT

NOTE: Photos are for basic illustration / reference purposes only. Actual equipment configuration may differ from that shown.

⚠ WARNING **Do not attempt to touch brazed joints while hot. Severe burns may result.**

When installing an expansion valve, it is not necessary to slide the coil out of the housing.



III-1. Disassemble the Flowrator body using two wrenches. Unscrew the body with a counterclockwise motion.

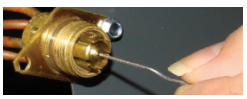

III-2. Remove the existing flowrator piston using a small wire or pick.



III-3. Replace the Teflon O-ring seal in place (located between the halves).

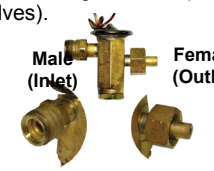

III-4. Inspect the TXV box to confirm that the valve is compatible with the refrigerant in the system.

III-5. Remove the valve from the box and note the location of the inlet side (threaded male port) and the outlet side (female swivel nut port).

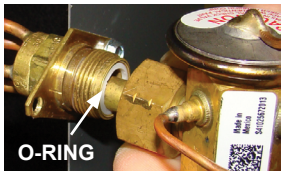

III-6. After ensuring that the Teflon O-ring seal is still in place inside the flowrator body, screw the female swivel nut onto the flowrator body.

III-7. Slide attachment the nut onto the liquid line stub out. *(See Section 8.1.1, I-3, Fig. 8.4)*

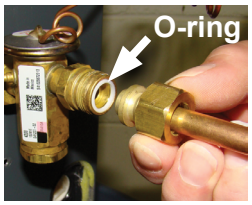

III-8. Braze the stub-out portion to the liquid line and let cool.

III-9. Remove the additional Teflon O-ring seal from the box and place on the shoulder just inside the TXV inlet port. Screw the nut attached to the stub-out portion of the flowrator body onto the inlet port of the TXV.

III-10. Tighten all connections taking care to use proper back up. Tighten the nut to a torque of approximately 10-30 ft-lbs

III-11. Remove the valve identification sticker from the valve and place it adjacent to the Aspen model number on unit name plate.

III-12. Some Aspen coils come with a Schrader valve on the suction line. **If a Schrader port is present.**





A. Remove the valve stem from the Schrader port mounted on the suction line.

B. Screw flare nut on TXV equalization tube onto the Schrader valve stem.

⚠ CAUTION **When handling or manipulating the equalizer tube, take great care not to kink or make extreme bends in the tubing.**

⚠ CAUTION **Using a non-bleed expansion valve may require the use of a hard-start kit. Follow the outdoor unit manufacturer's guidelines.**

9. LEAK CHECK / STANDING PRESSURE TEST / VACUUM TEST

9.1 STANDING PRESSURE TEST

1. Following outdoor unit manufacturer instructions and recommendations, Using dry nitrogen or dry helium, pressurize the field piping and indoor coil to the lower of the maximum operating pressures listed on the nameplates of the indoor and outdoor units (likely 600 psi).
2. The test pressure after removal of the pressure source shall be maintained for at least one (1) hour no decrease of pressure indicated by the test gauge, with the test gauge resolution not exceeding 30 psi.
3. Check for leaks by using a soapy solution at each field-made brazed joint and screw-on line connections. A leak will produce bubbles in the soap solution. No refrigerant shall be used for pressure testing to detect leaks.



4. If any leaks are discovered, remove nitrogen pressure and repair leaks. Repeat steps 1-3.

9.2 VACUUM TEST

Important: Do not open the service valves until the refrigerant lines and indoor coil leak check and evacuation are completed.

1. Evacuate until the micron gauge reads no higher than 350 microns, then close off the valve to the vacuum pump.
2. Observe the micron gauge. Evacuation is complete if the micron gauge does not rise above 500 microns in one (1) minute and 1500 microns in ten (10) minutes.
3. Once evacuation is complete, blank off the vacuum pump and micron gauge, and close the valve on the manifold gauge set.
4. All procedures for charging the system with refrigerant shall be according to the instructions provided by the manufacturer of the outdoor unit.

Important: *Under no circumstances shall potential sources of ignition be used in the searching for or detection of refrigerant leaks.*

After charging the system, all indoor field-made joints of the field piping shall be checked for refrigerant leaks using an electronic leak detector calibrated for R22 or R410a (depending on the application) having a sensitivity of 5 grams per year or better.

With no leaks or weak connections present, evacuate the system and charge as per the outdoor unit manufacturer instructions and specifications.

⚠ NOTICE **Test pressures for A2L refrigerants, field made refrigerant joints shall have a sensitivity of 5 grams per year of refrigerant or at least 25 times the maximum allowable pressure. No leaks shall be detected in the systems.**

10. ELECTRICAL LINE VOLTAGE CONNECTIONS

⚠ WARNING **Disconnect ALL power before servicing or installing this unit. Multiple power sources may be present. Failure to do so may cause property damage, personal injury, or death.**

⚠ WARNING **Before obtaining access to terminals, all supply circuits must be disconnected.**

⚠ WARNING **A fused disconnect switch must be field provided for the unit to be in compliance with UL 60335-2-40 Clause 7.12.2.**

These units are designed for single phase 120 volts, 60 HZ power supply. Wire selection and wiring must be in accordance with the latest edition of the National Electric Code, or in Canada the Canadian electrical Code, and local codes to determine correct wire sizing. Unit terminals are designed to accommodate copper and aluminum wiring. If aluminum wiring is used: All applicable local and national codes must be followed please observe special precautions relative to sizing, wire connections and corrosion protection.

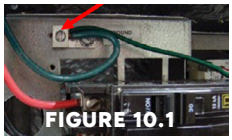

Line voltage wiring should be routed through the access holes at the top of the air handler. To minimize air leakage, seat the wiring entry point on the outside of the unit. Proper electrical conduit connection fittings should be used. Connect the power wiring to the line side connections on the air handler. The electrical ground wire should be connected to the grounding lug. Ensure both the field supplied ground wire and air handler GREEN ground wire are both secured to the grounding lug of the air handler.

11. LOW VOLTAGE CONNECTIONS

A 24 V power supply is provided by an internally wired low voltage transformer that is standard on all models. See the Wiring diagram, Fig. 16.5.

Connect the field wiring at the pigtails supplied with the air handler as specified in Wiring diagram, Fig. 16.1, 16.2, 16.3 & 16.4. To air leakage, seal the wiring entry point at the outside of the unit.

⚠ NOTICE **All wiring must comply with local and national electrical code requirements. Read and heed all unit caution labels.**

11.1 SINGLE-STAGE COOLING WITH ELECTRIC HEAT

The air handler comes factory setup for a single stage cooling system.

During cooling mode operation, the indoor blower G wire will energize a time delay relay inside the air handler. After a short time delay period, the time delay relay will send out a 24-volt signal to the low voltage terminal on the motor. Fan delay periods are 7 seconds ON delay and 65 seconds OFF delay. (See wiring in Section 16)

The Y wire from the thermostat is not connected at the air handler. This wire goes directly to the outdoor unit 24 volt wiring to turn on the outdoor condensing unit when a call for cooling takes place. The 24-volt common for the outdoor unit circuits is connected at the air handler Brown wire goes directly to the outdoor unit 24 volt wiring to turn on the outdoor condensing unit when a call for cooling takes place. The 24-volt common for the outdoor unit circuits is connected at the air handler Brown wire.

11.2 TWO STAGE CONDENSING UNITS

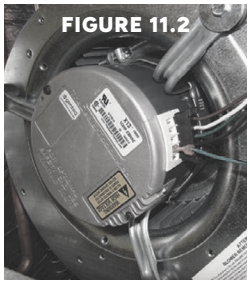
FIGURE 11.2

If the outdoor condensing unit is a two-stage model, a field provided Y2 wire can be connected to the motor using an electrical spade connector. The number 4 and 5 terminals on the motor are speed taps that will increase the blower speed for second stage cooling operation. Both the G and Y2 terminals will be energized at the same time during a call for second stage blower speed operation. The motor will run at the speed where the Y2 wire is connected (Fig 11.2).

Operating CFM based upon each speed tap number is shown on the electrical wiring diagram of the unit. Final air volume adjustments should be made by referencing total external static pressure (Tables 12.2a below).

12. AIR VOLUME ADJUSTMENT

Air volume needs to be set to the level recommended by the outdoor unit equipment manufacturer. Most systems will require around 400 CFM of indoor air for every 1 ton of system cooling capacity. The air volume must be set prior to attempting system charge.

The LGM Series uses a constant torque ECM Motor. This motor will try to maintain proper motor torque to achieve programmed air volume levels at varying levels of external static pressure. The air volume level produced by the air handlers at varying external static pressure levels is shown in Table 12.2a and 12.2b.

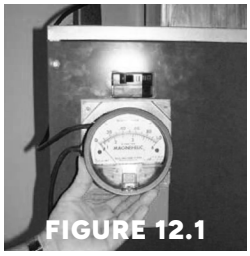
FIGURE 12.1

Use a Magnehelic Gauge with a 1" scale and two static pressure tips to measure the static pressure during the air volume adjustment procedure (Fig. 12.1). The high port static pressure tip should be placed in the supply duct near the outlet of the air handler. The low port static pressure tip should be placed in the return air duct near the entrance to the air handler. The factory provided air filter should be in place inside of the air handler.

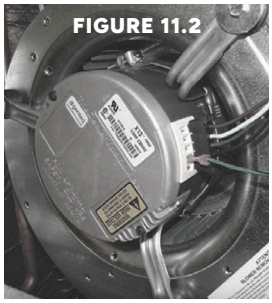
FIGURE 11.2

12.1.1. Select a starting speed tap from the CFM table. The blower motor has selectable speed taps labeled 1 through 5 (Fig. 12.1). The speed taps are energized by 24 volts received from the time delay relay. When two stage cooling units are used, both the first and second stage fan speed taps will be energized at the same time. The motor will run at the speed generated at the highest motor speed tap.

12.1.2. Call for fan only operation at the thermostat.

12.1.3. Read the external static pressure level on the Magnehelic gauge.

12.1.4. Make speed tap selection changes to get the air volume as close as possible to the required level.

12.1.5. If the static pressure is above 0.5" w.c., excessive turbulence or duct friction needs to be reduced. (Obstructions in the duct system can also cause excessive static pressure.)

12.1.6. When proper air volume is established, move on to the charging procedure.

TABLE 12.2A - LGM SERIES HIGH-EFFICIENCY AIRFLOW TABLE

MODEL	SPEED TAP	CFM VS EXTERNAL STATIC									
		0.1	0.2	0.3	0.4	0.5	0.6	0.7	0.8	0.9	1.0
LGM2 4A-E	T5	1030	1000	975	945	910	880	865	830	795	750
	T4	975	945	910	880	865	830	795	775	715	700
	T3	845	810	780	755	725	705	665	635	600	550
	T2	775	745	725	700	665	645	610	575	525	465
	T1	645	620	590	565	550	510	480	420	370	330
LGM 36L	T5	1250	1225	1200	1175	1150	1125	1050	960	-	-
	T4	1160	1140	1115	1090	1075	1030	1000	975	900	-
	T3	925	900	865	845	810	775	745	710	695	650
	T2	810	770	740	710	680	655	620	590	550	510
	T1	650	640	610	575	540	510	475	420	380	345
LGM 24F-M 36A-E 36K,M 48K	T5	1320	1300	1285	1265	1225	1200	1165	1130	1100	1070
	T4	1150	1130	1115	1090	1060	1020	975	945	880	810
	T3	930	910	875	845	800	765	675	625	590	540
	T2	825	790	755	720	675	600	550	510	485	440
	T1	745	725	675	645	565	525	480	445	400	350
LGM 48L	T5	1375	1340	1315	1300	1255	1200	1150	1120	1090	1050
	T4	1175	1150	1125	1075	1075	1045	990	960	900	845
	T3	915	900	880	850	800	765	705	665	620	590
	T2	850	830	780	730	675	635	585	550	510	450
	T1	725	705	675	620	565	530	485	460	415	380
LGM 36F-J 48A-E 60A-E	T5	1690	1650	1630	1610	1600	1590	1570	1550	1515	1500
	T4	1580	1460	1435	1420	1400	1370	1350	1325	1275	1250
	T3	1300	1275	1260	1240	1200	1165	1130	1100	1075	1050
	T2	1175	1160	1130	1090	1050	1000	960	930	900	860
	T1	1020	975	945	900	850	810	775	715	695	650
LGM 60C	T5	1750	1730	1695	1655	1630	1570	1520	1475	1450	1415
	T4	1560	1520	1475	1435	1435	1375	1350	1325	1275	1250
	T3	1350	1300	1275	1225	1200	1175	1125	1100	1060	1030
	T2	1175	1140	1100	1075	1050	1000	975	928	895	790
	T1	990	940	910	880	850	790	775	675	620	600
LGM6 60K-M	T5	2080	2050	2025	2000	1965	1935	1910	1880	1845	1825
	T4	1990	1965	1940	1910	1885	1855	1825	1790	1760	1725
	T3	1855	1830	1795	1775	1745	1710	1680	1645	1615	1580
	T2	1575	1540	1510	1475	1435	1400	1360	1320	1280	1240
	T1	1380	1345	1305	1265	1225	1175	1135	1085	1040	990
LGM 48F-J 60F-J	T5	2130	2090	2050	2005	1965	1920	1875	1855	1830	1780
	T4	1990	1950	1910	1860	1815	1775	1745	1710	1675	1635
	T3	1815	1760	1725	1675	1615	1600	1560	1520	1475	1415
	T2	1635	1595	1560	1500	1435	1415	1370	1300	1200	1125
	T1	1480	1435	1370	1325	1275	1230	1150	1040	980	925

TABLE 12.2B - LGM SERIES STANDARD AIRFLOW TABLE

MODEL	SPEED TAP	CFM VS EXTERNAL STATIC								
		0.1	0.2	0.3	0.4	0.5	0.6	0.7	0.8	0.9
LGM 23	T5	880	850	815	775	730	685	635	550	510
	T4	820	790	760	740	705	650	610	525	485
	T3	760	730	700	675	645	615	575	490	435
	T2	705	680	650	615	590	560	535	465	385
	T1	650	620	600	575	540	515	475	425	360
LGM 35	T5	1220	1195	1165	1140	1115	1085	-	-	-
	T4	1140	1115	1085	1055	1030	995	965	935	900
	T3	935	900	875	840	815	775	745	705	675
	T2	815	785	755	725	685	650	615	590	565
	T1	695	650	615	580	540	515	475	435	400
LGM 47/59	T5	1915	1880	1850	1815	1775	1740	1705	-	-
	T4	1815	1775	1740	1700	1665	1625	1585	1545	1505
	T3	1525	1485	1440	1395	1350	1300	1250	1200	1145
	T2	1290	1255	1205	1155	1100	1140	995	935	865
	T1	925	875	815	735	650	565	525	475	420

NOTE:

- Airflow data indicated is at 120V, front return, dry coil conditions only; tested without filters, and without electric heat installed.
- Air handler units are tested to UL60335-2-40 standards up to 0.6 in. w.c. external static pressure.
- The above charts are for information only. For optimal performance, external static pressures of 0.2 in. w.c. to 0.5 in. w.c. are recommended. Heating applications are tested at 0.5 in. w.c. external static pressure. For satisfactory operation, external static pressure must not exceed value shown.
- Airflow data shown is from testing performed at 120V LGM units are equipped with a standard ECM constant torque motor.
- The above data can be used for airflow at other distribution voltages.

13. SYSTEM CHARGING

⚠ WARNING **Units designed for use with R32 refrigerant MUST be charged with R32 refrigerant. Ensure that the R32 sensor is installed correctly and is operational.**

⚠ WARNING **Units designed for use with R454B refrigerant MUST be charged with R454B refrigerant. Ensure that the R454B sensor is installed correctly and is operational.**

⚠ CAUTION **An improperly charged system will likely cause loss in system performance and may damage the compressor.**

⚠ CAUTION **Refer to outdoor unit manufacturer charging guidelines and recommendations. The recommendations given below are general in nature and are NOT to supersede outdoor unit manufacturer specifications.**

Where addition of charge is required to complete installation, instructions on how to determine the additional REFRIGERANT CHARGE and how to complete the REFRIGERANT CHARGE on the label provided by the outdoor unit manufacturer adjacent to the nameplate if the compressor bearing unit. Interconnecting refrigerant piping length and diameter shall be taken into consideration.

13.1. TXV COILS:

If the unit is equipped with a **fixed TXV**, add refrigerant until the subcooling measures at the outdoor unit liquid line matches the subcooling recommendations of the outdoor manufacturer. If the charge is unavailable charge the unit to a subcooling value of 8°F +/- 1°F.

If the unit is equipped with an **adjustable TXV**, add refrigerant until the subcooling measures at the outdoor unit liquid line matches the subcooling recommendations of the outdoor manufacturer. If the charge is unavailable charge the unit to a subcooling value of 8°F +/- 1°F.

⚠ NOTICE **When adjusting the TXV, the valve stem or adjusting screw should not be adjusted more than a 1/4 turn at a time. To adjust superheat, turn the valve stem clockwise to increase and counterclockwise to decrease.**

13.1.1. **If subcooling and superheat are low,** adjust TXV to 8°F +/- 1°F superheat, then check subcooling.

13.1.2. **If subcooling is low and superheat is high,** add charge to raise subcooling to 8°F +/- 1°F then check superheat..

13.1.3. **If subcooling and superheat are high,** adjust TXV valve to 8°F +/- 1°F superheat, then check subcooling.

13.1.4. **If subcooling is high and superheat is low,** adjust TXV valve to 8°F +/- 1°F superheat and remove charge to lower the subcooling to 8°F +/- 1°F.

The TXV should **NOT** be adjusted at light load / ambient conditions of 60°F or below.

13.2. FIXED ORIFICE / PISTON - FLOWRATOR COILS

Add refrigerant until the superheat measured at the outdoor unit suction/ vapor line matches the superheat from the chart below.

OUTDOOR TEMP	SUPERHEAT		
°F D.B.	Min.	Nom.	Max.
65	30	35	40
70	26	30	34
75	21	25	29
80	17	20	23
85	12	15	18
90	8	10	12
95	4	5	7
100			

14. A2L REFRIGERANT LEAK DETECTION SYSTEMS

Read the precautions in this manual carefully before operating the unit.

Read the instructions in this manual carefully before operating the unit.

Read the instructions in this manual carefully before servicing the unit.

Read the instructions in this manual carefully before wiring the unit.

Warning or Caution

Products designed for use with A2L Refrigerants are equipped with a refrigerant leak detection system (which includes an A2L Sensor, a Mitigation Control Board, Accessory Control Relay, and Harnesses) which must be wired as specified in the Wiring Diagram.

The A2L Sensor must be installed and powered for service.

⚠ WARNING **Disconnect ALL power before servicing or installing this unit. Multiple power sources may be present. Failure to do so may cause property damage, personal injury, or death.**

⚠ WARNING **When using FLAMMABLE REFRIGERANTS, LEAK DETECTION SYSTEM installed. Unit must be powered except for service.**

14.1. RDS: SENSOR, MITIGATION CONTROL, AND WIRING

Refer to Table 14.1 for R32 and Table 14.2 for R454B below for minimum conditioned room requirements.

Wiring instructions are detailed in the wiring diagrams in Section 16 of this manual. All wiring installed in the field used with the RDS must meet the following specifications:

- 18 AWG
- 1.58mm insulation thickness or protected from damage

The RDS is factory installed and configured for upflow installation / operation as shown in Figure 14.

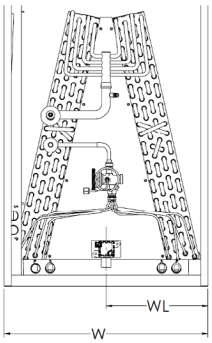

FIGURE 14

WIDTH (W)"	SENSOR LOCATION (WL)"
14.5	7.25
17.5	8.75
21.0	10.50
24.5	12.25

It is the installer's responsibility to ensure that mitigation mode is operational. The functionality can be tested after the installation.

The A2L sensor is not intended for service or repair. If the sensor is not functioning properly, mitigation mode will engage and the sensor must be replaced by removing the sensor and sensor clip assembly from the drain pan and replacing with a new sensor and sensor clip assembly.

⚠ WARNING **Refrigerant sensors for refrigerant detection systems shall only be replaced with sensors specified by the appliance manufacture.**

TABLE 14.1

Minimum Mitigation Airflow for R32 Systems						
Total System Charge (lb)	Total System Charge (oz)	Total System Charge (kg)	Minimum Room Area (m^2)	Minimum Room Area (ft^2)	Minumum Mitigation Airflow (m^3/hr)	Minumum Mitigation Airflow (CFM)
4	64	1.81	5.39	58.02	177.88	105
5	80	2.27	6.74	72.53	222.35	131
6	96	2.72	8.09	87.03	266.82	157
7	112	3.18	9.43	101.54	311.29	183
8	128	3.63	10.78	116.04	355.76	209
9	144	4.08	12.13	130.55	400.23	236
10	160	4.54	13.48	145.05	444.70	262
11	176	4.99	14.82	159.56	489.17	288
12	192	5.44	16.17	174.06	533.64	314
13	208	5.90	17.52	188.57	578.11	340
14	224	6.35	18.87	203.07	622.58	366
15	240	6.80	20.21	217.58	667.05	393
16	256	7.26	21.56	232.08	711.52	419
17	272	7.71	22.91	246.59	755.99	445
18	288	8.16	24.26	261.09	800.46	471
19	304	8.62	25.60	275.60	844.93	497
20	320	9.07	26.95	290.10	889.40	523
NOTE: The installer should verify the actuation of the mitigation procedure, as well as the the airflow according to the chart. The installer should refer to the airflow table provided by the furnace or blower manufacturer.						

TABLE 14.2

Minimum Mitigation Airflow for R454B Systems						
Total System Charge (lb)	Total System Charge (oz)	Total System Charge (kg)	Minimum Room Area (m^2)	Minimum Room Area (ft^2)	Minumum Mitigation Airflow (m^3/hr)	Minumum Mitigation Airflow (CFM)
4	64	1.81	5.57	59.98	183.89	108
5	80	2.27	6.97	74.98	229.86	135
6	96	2.72	8.36	89.97	275.83	162
7	112	3.18	9.75	104.97	321.81	189
8	128	3.63	11.14	119.96	367.78	216
9	144	4.08	12.54	134.96	413.75	244
10	160	4.54	13.93	149.95	459.72	271
11	176	4.99	15.32	164.95	505.69	298
12	192	5.44	16.72	179.94	551.67	325
13	208	5.90	18.11	194.94	597.64	352
14	224	6.35	19.50	209.93	643.61	379
15	240	6.80	20.90	224.93	689.58	406
16	256	7.26	22.29	239.92	735.55	433
17	272	7.71	23.68	254.92	781.53	460
18	288	8.16	25.08	269.92	827.50	487
19	304	8.62	26.47	284.91	873.47	514
20	320	9.07	27.86	299.91	919.44	541
NOTE: The installer should verify the actuation of the mitigation procedure, as well as the the airflow according to the chart. The installer should refer to the airflow table provided by the furnace or blower manufacturer.						

NOTE: The Total System Charge in the above tables, 14.2C and 14.2D is the total system charge which is marked on the system as specified in the outdoor unit manufacturer's instructions.

The mitigation requirements for evaporator coils using A2L refrigerants are calculated at sea level. For altitudes above 800 meters, the minimum conditioned area must be adjusted by the corresponding altitude adjustment factor (AF) shown in the reference table below.

The Mitigation Control Board provides refrigerant leak detection and mitigation response for systems utilizing A2L-type refrigerants. The Mitigation Control Board can monitor up to two A2L Sensors, depending on the system's needs. The control module will constantly monitor the A2L Sensor(s) for a refrigerant leak condition. When the A2L Sensor detects a concentration of refrigerant which meets or exceeds the Lower Flammability Limit (%LFL), the control module locks out the compressor and activates the ventilating fan.

The Mitigation Control Board control module is certified as a Class B safety control and conforms to the guidelines set forth in Annex LL of UL standard 60335-2-40:

HEIGHT / Altitude (m)	HEIGHT / Altitude (ft)	ALTITUDE ADJUSTMENT FACTOR
0	0	1.00
200	656	1.00
400	1312	1.00
600	1969	1.00
800	2625	1.02
1000	3281	1.05
1200	3937	1.07
1400	4593	1.10
1600	5249	1.12
1800	5906	1.15
2000	6562	1.18
2200	7218	1.21
2400	7874	1.25
2600	8530	1.28
2800	9186	1.32
3000	9843	1.36
3200	10499	1.40

TABLE 14.3

a. The control will communicate with an external A2L Sensor in order to request data on the concentration of airborne refrigerant within the system enclosure.

b. The control will provide a system response (i.e. deactivate the compressor, energize a ventilating fan, and provide an alarm indication) in the event of a reported concentration of at least 15% of the Lower Flammability Limit (determined by refrigerant composition). The system response (also referred to as the "mitigation state" or "safe state") must last for at least 5 minutes from initial fault detection.

c. The control will only be able to recover operation if the system response has been active for at least 5 minutes and the A2L Sensor reports a concentration of refrigerant less than 8% LFL.

d. Loss of communication between the control and the A2L Sensor will also result in the mitigation state for at least 5 minutes. The control will not recover until communication is restored.

14.2 RDS: A2L MITIGATION+ACCESSORY CONTROL VERIFICATION

VERIFICATION: RUNNING THE SYSTEM TEST IS MANDATORY FOR ALL INSTALLATIONS. THE HVAC SYSTEM MUST NOT COMPLETE COMMISSIONING UNTIL THE INSTALLATION STEPS OUTLINED IN THIS MANUAL HAVE BEEN SUCCESSFULLY COMPLETED.

IMPORTANT: NEVER CONNECT SENSOR TO THE MITIGATION CONTROL BOARD WHILE IT IS POWERED UP. ONLY USE THE "SENSOR1" PORT, THE "SENSOR2" PORT SHALL ONLY BE USED IN APPLICATIONS WITH TWO INDOOR UNITS IN WHICH THE SENSOR FROM THE SECOND INDOOR UNIT WILL ALSO CONNECT TO THE MITIGATION CONTROL BOARD. ALWAYS ENSURE THAT THE SYSTEM IS POWERED OFF BEFORE CONNECTING THE SENSOR TO THE MITIGATION CONTROL BOARD. IF THE SENSOR IS NOT CONNECTED BEFORE POWERING UP, THE SYSTEM WILL ENTER LEAK MITIGATION MODE. ONCE THE SYSTEM ENTERS LEAK MITIGATION MODE IT WILL STAY IN MITIGATION STATE FOR AT LEAST 5 MINUTES. THEREFORE, IT IS STRONGLY ADVISED TO CONNECT THE SENSOR BEFORE POWERING UP.

Perform the A2L Mitigation Control refrigerant leakage test for all modes of operation one by one. – Cooling (for ACs & heat pumps), Heating (for heat pumps), Electric Heating, and Fan modes.

The "Accessory Control" includes a relay and a wire harness used to de-energize the W1 & W2 call or to energize or de-energize add on equipment / accessories or functions.

FIG. 14.2

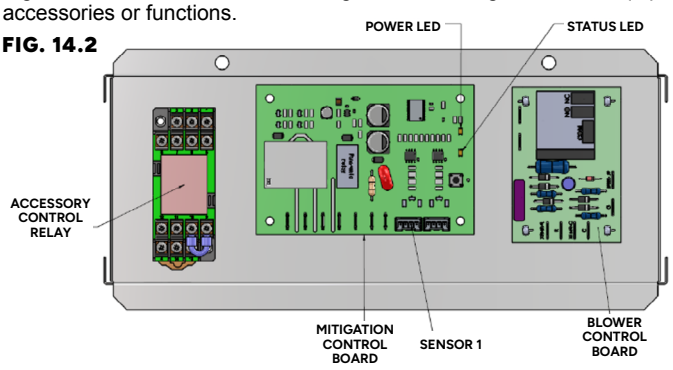

Set the thermostat to one of the above operation modes, and ensure that the system is powered and running properly in that mode. The test sequence will need to be performed again in each operation mode. Remove the access panel from the unit to access the mitigation control board and accessory control relay. Once the system is powered, the control will communicate with the A2L sensor to request data on the concentration of airborne refrigerant within the coil cabinet, wait 10 seconds, and verify that the STATUS LED shows Warm-Up mode (solid ON), then wait 20 – 30 seconds and verify that the STATUS LED shows Run mode (solid OFF).

A. Locate the sensor cable connected to the “SENSOR1” port on the mitigation control board. (See Figure 16.3). Remove the sensor cable by squeezing the tab on the connector and pulling away from the board to disconnect the sensor.

B. Once the sensor is disconnected, wait 15 seconds, the mitigation control board no longer detects the sensor, verify that the STATUS LED blinks fault code for communication fault (2 blinks), the mitigation sequence begins:

   i. The HVAC system operation that was chosen the control will provide a system response which will deactivate the compressor and the additional equipment / accessory that is connected to the terminals 3, 4 and 11, 12 of the relay such as but not limited to electric heat or gas heat or air cleaner at the same time, then it will energize the indoor blower. See the relay and wiring diagram below for details.

   ii. The indoor blower will begin to operate and remain running for at least 5 minutes from initial fault detection. The STATUS LED (2 blink) fault code will continue for the entire 5 minutes.

   iii. Once steps B. i., and B. ii. have been confirmed the test is considered successful. It is recommended to wait the entire 5 minutes to allow the test sequence to expire.

14.3. MITIGATION CONTROL BOARD OPERATION

14.3.1 OPERATION

MITIGATION CONTROL OPERATION

Current State	Outputs	Status Indication	Next state
Sensor Warm-up	CC: Off Fan: Off Alarm: On	ON	• If sensor reports Run mode: Normal Operation • If sensor reports Error mode: Communication Fault
Normal operation	CC: On Fan: Off Alarm: On	OFF	• If %LFL ≥ Trip point: % LFL Fault • If board loses communication with sensor: Communication Fault
Communication Fault	CC: Off Fan: On Alarm: Off	2 BLINKS	• If board receives valid data on required sensor port(s) and lockout timer expires: Normal operation
%LFL Fault	CC: Off Fan: On Alarm: Off	1 BLINK	• If %LFL < Recovery point and lockout timer expires: Normal operation

LED STATUS CODES

LED Code	Number of Pulses
Normal Operation	100% OFF
Warm-up	100% ON
%LFL Fault	1
Communication Fault	2

14.3.2 APPLICATION-SPECIFIC PARAMETERS

- ***%LFL Trip Point - (15%):*** The concentration of sensed refrigerant that will cause a fault condition, expressed as a percentage of the LFL (25% is the maximum allowable value per UL standard). Also referred to as the DTLV.
- ***%LFL Recovery Point - (8%):*** The concentration that the sensed refrigerant must be less than in order to recover from a fault condition, expressed as a percentage of the LFL. The recovery point cannot exceed the trip point.
- ***Lockout Time - (300):*** The minimum amount of time (in seconds) that must elapse before the control can recover from a fault after entering the mitigation state (300 is the minimum allowable value per UL standards).
- ***Reset Mode - (Auto):*** The method of fault recovery for the control.

NOTE: Loss of communication between the control and the sensor will also result in the mitigation state for at least 5 minutes. The control will not recover until communication is restored.

15. FINAL SYSTEM CHECKOUT

15.1.1. Make certain all cabinet openings are properly sealed, and any grommets moved during installation are moved into proper place.

15.1.2. With cooling system operating, check for condensate leakage.

15.1.3. Perform leak detection inspection of refrigerant circuit and connecting piping.

15.1.4. Secure all cabinet doors. All panels must be in place and secured. For airtight application, all gaskets must remain intact on all surfaces as shipped with the unit at prescribed locations to achieve 1.4% low leakage.

16. WIRING DIAGRAMS

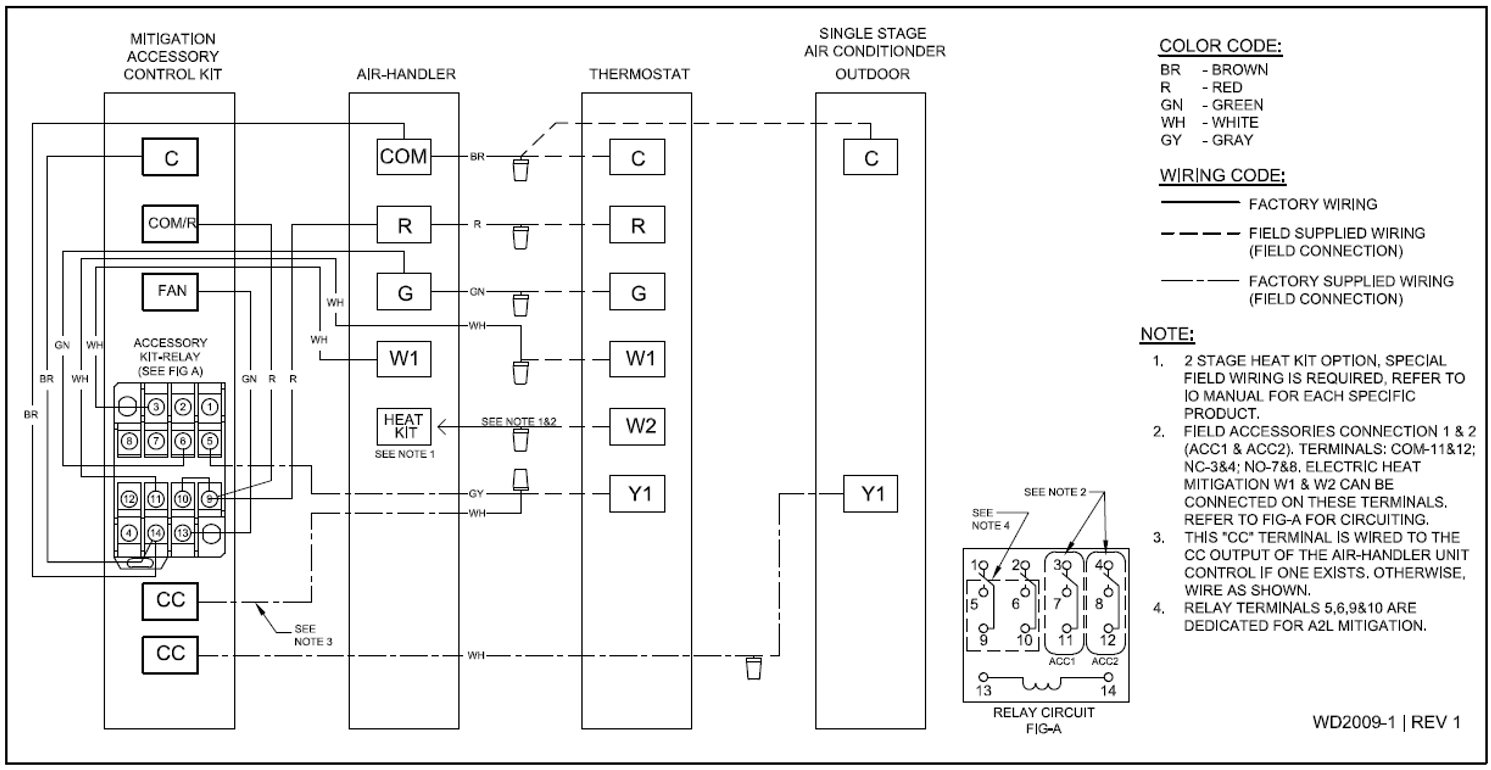

16.1 – SINGLE-STAGE AC

NOTE: Wiring Diagram is subject to change. Always refer to the wiring diagram on the unit for the most up-to-date wiring.

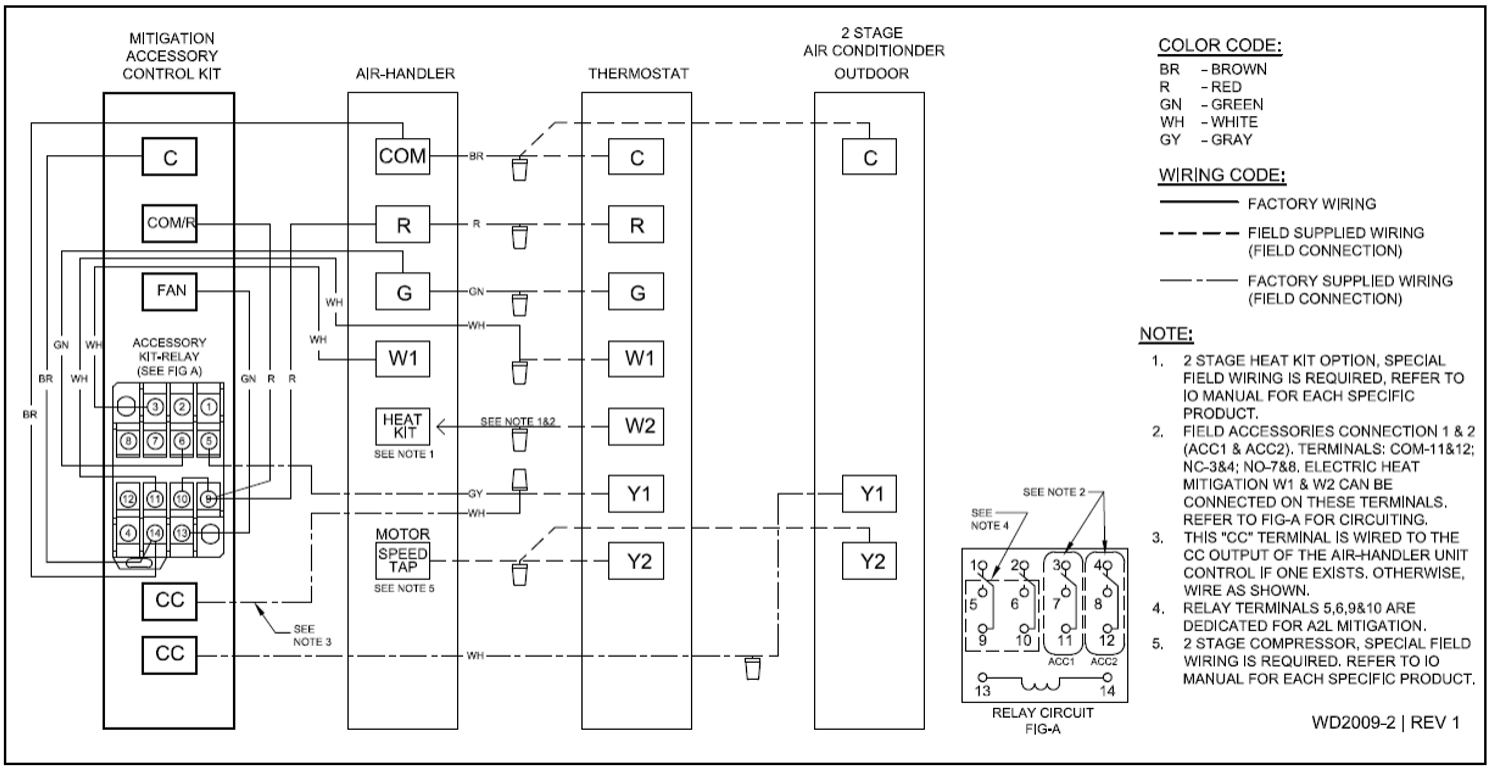

16.2 – MULTI-STAGE AC

NOTE: Wiring Diagram is subject to change. Always refer to the wiring diagram on the unit for the most up-to-date wiring.

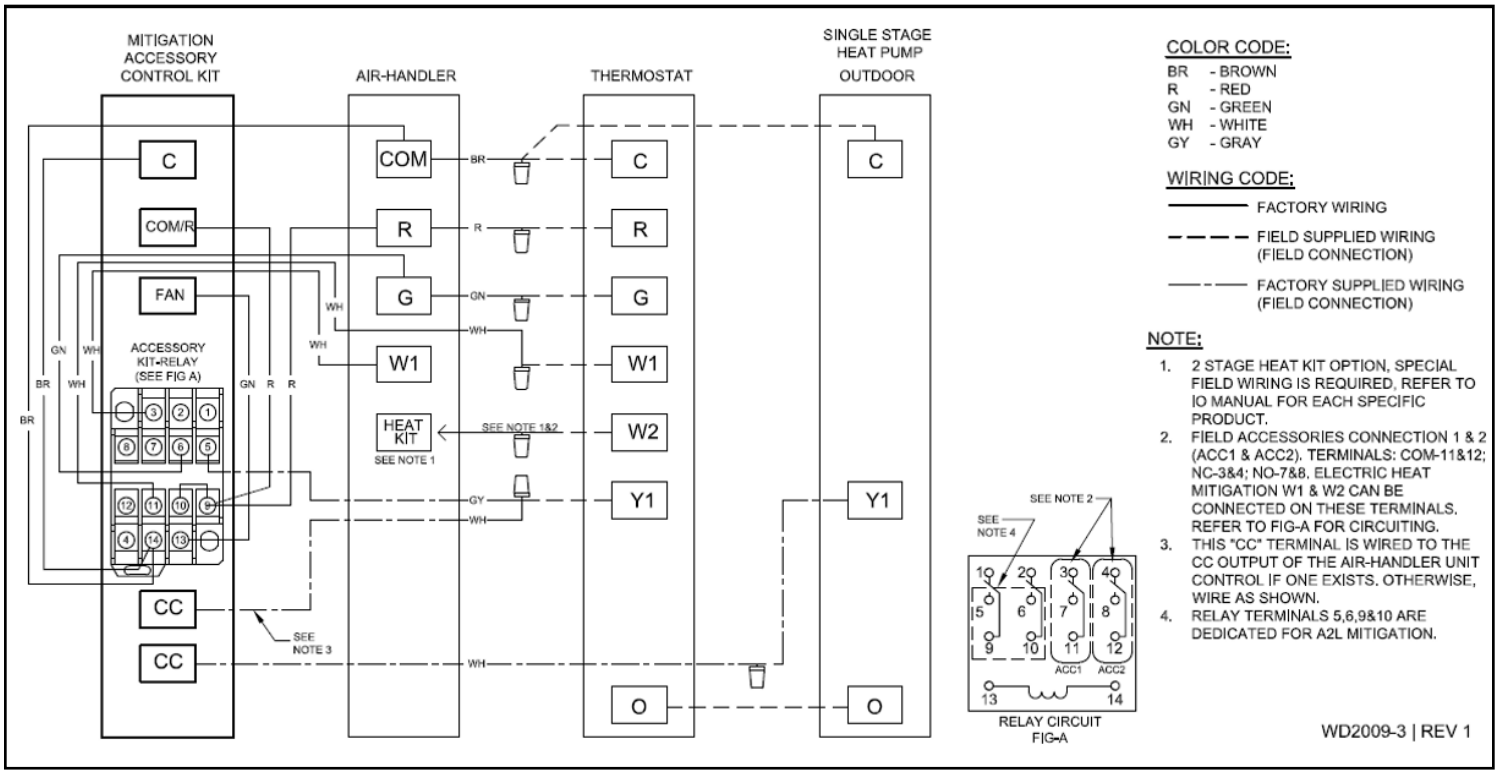

16.3 – SINGLE-STAGE HEAT PUMP

NOTE: Wiring Diagram is subject to change. Always refer to the wiring diagram on the unit for the most up-to-date wiring.

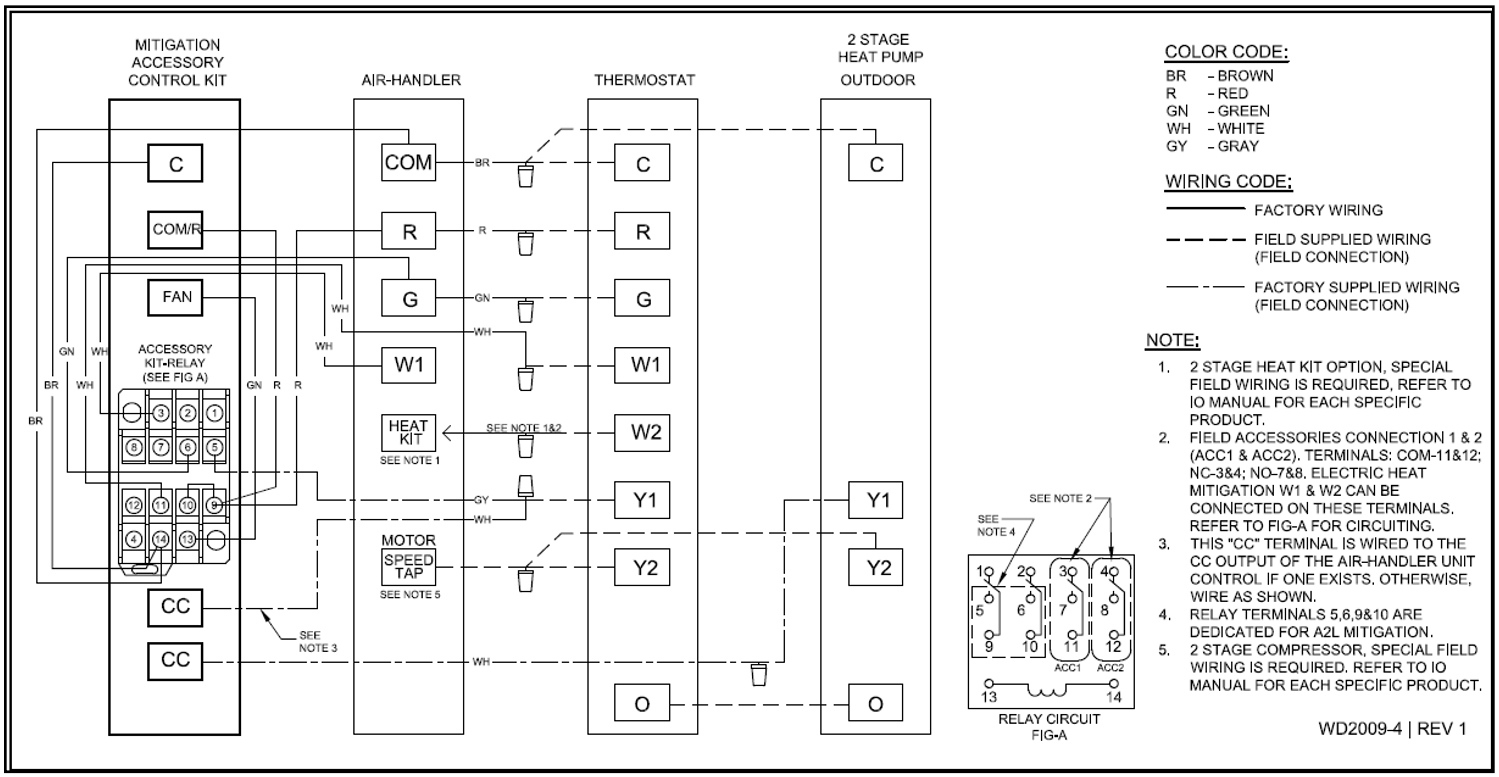

16.4 – MULTI-STAGE HEAT PUMP

NOTE: Wiring Diagram is subject to change. Always refer to the wiring diagram on the unit for the most up-to-date wiring.

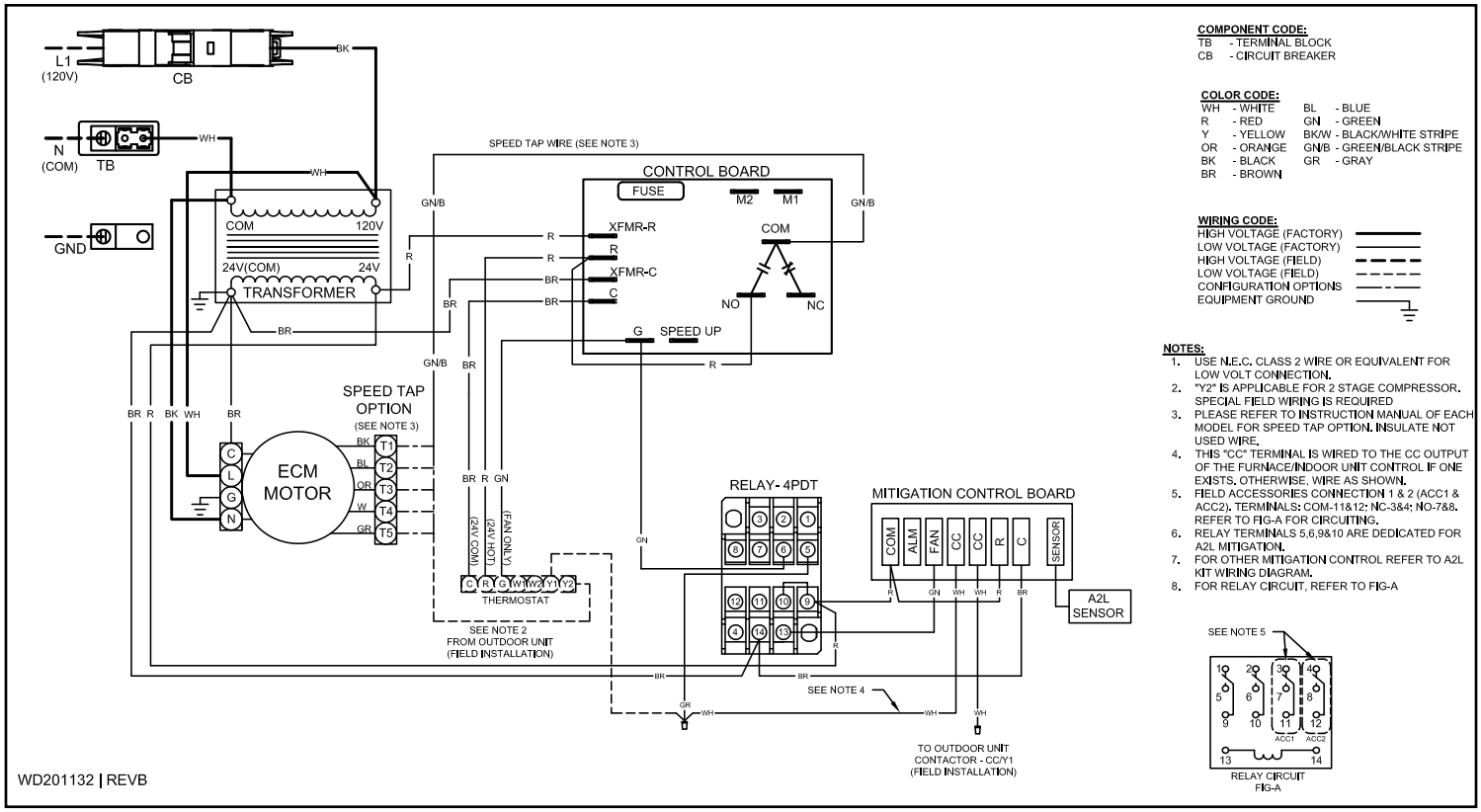

16.5 – ECM MOTOR

NOTE: Wiring Diagram is subject to change. Always refer to the wiring diagram on the unit for the most up-to-date wiring.

SCAN QR CODE TO VISIT ASPEN'S WEBSITE

373 Atascocita Rd., Humble, TX 77396
Phone: 281.441.6500
Toll Free: 800.423.9007
Fax: 281.441.6510
www.aspenmfg.com

In keeping with its commitment to continuous improvement. Aspen Manufacturing reserves the right to make changes without notice and incurring obligation. To stay up-to-date with this product and Aspen's trusted line of coils, air handlers, and more, go to our website at www.aspenmfg.com.

Revised 07/2025. Subject to change without notice and without incurring obligation.
© 2025 Aspen Manufacturing. All Rights Reserved